MVE Cryogenics®

M-45 MANIFOLD

USER MANUAL

REVISION LOG

REVISION	REVISION DESCRIPTION
A (3/15/84)	Manual released. All pages at revision level A. This manual supersedes all previous editions.
B (1/15/84)	Manual revised. Changes on page 6-3, Table 6-1 and page 6-5, Table 6-2 and Table 6-3.
C (12/15/87)	Corrected Address
D (6/24/93)	Major Changes

REVISION LETTERS I, O, Q, AND X ARE NOT USED.

Address comments concerning this manual to:

Minnesota Valley Engineering, Inc.
Two Appletree Square, Suite 100
8011 34th Avenue South
Bloomington, MN 55425-1636
Tel: 1-800-253-1769

© 1984 by Minnesota Valley Engineering, Inc.
Printed in the United States of America

PREFACE

This edition documents Release A and all subsequent releases of the Minnesota Valley Engineering (MVE) M-45 Manifold, unless otherwise indicated by MVE representatives or specified in new editions.

This manual is intended to provide the user with the information necessary to operate and maintain the M-45 Manifold. Section 1 provides a general introduction to the M-45 Manifold. Section 2 describes all operator controls and indicators. Manifold operating procedures are contained in Section 3. Section 4 provides recommended handling procedures. Section 5 describes recommended maintenance, trouble-shooting, and repair procedures. Sections 6 and 7 contain recommended spare/repair parts lists and schematic diagrams, respectively. Appendix A lists all abbreviations and acronyms used in this manual. Appendix B describes optional equipment. Appendix C contains applicable oxygen and inert gases (nitrogen, argon, nitrous oxide and carbon dioxide) safety bulletins.

Any comments or suggestions related to this manual are encouraged and should be forwarded in writing to:

Minnesota Valley Engineering, Inc.
Two Appletree Square, Suite 100
8011 34th Avenue South
Bloomington, MN 55425-1636
Tel: 1-800-253-1769

SAFETY SUMMARY

MVE has conducted a rigid test program, both internally and through an independent testing laboratory, to verify the safety of MVE equipment. MVE is justifiably proud of its reputation of providing cryogenic equipment of unquestioned integrity for many years. MVE equipments are safely designed with the following features:

(1) Hardware designs that provide long life and that meet all possible safety provisions.

(2) Safety relief devices to protect the equipment. All safety relief devices are sized and selected in accordance with CGA Pamphlet S-1.1 "Safety Relief Devices for Cylinders".

While MVE equipment is designed and built to the most rigid standards, no piece of mechanical equipment can ever be made 100% foolproof. Strict compliance with proper safety and handling practices is necessary when using a cryogenic manifold device or other compressed gas equipment. We recommend that all our customers re-emphasize safety and safe handling practices to all their employees and customers. While every possible safety feature has been designed into the M-45 Manifold and safe operations are anticipated, it is essential that the user of this unit carefully read to fully understand all WARNING and CAUTION notes listed in this safety summary and enumerated below. Also read to fully understand the information provided in the Safety Bulletins for Oxygen and Inert Gases located in Appendix C of this Manual. Periodic review of the Safety Summary is recommended.

WARNING

Excess accumulation of oxygen creates an oxygen enriched atmosphere (defined by the Compressed Gas Association as an oxygen concentration above 23 percent). In an oxygen enriched atmosphere, flammable items burn vigorously and could explode. Certain items considered noncombustible in air may burn rapidly in such an environment. Keep all organic materials and other flammable substances away from possible contact with oxygen; particularly oil, grease, kerosene, cloth, wood, paint, tar, coal dust, and dirt which may contain oil or grease. DO NOT permit smoking or open flames in any area where oxygen is stored, handled, or used. Failure to comply with this warning may result in serious personal injury.

WARNING

Nitrogen and argon vapors in air may dilute the concentration of oxygen necessary to support or sustain life. Exposure to such an oxygen deficient atmosphere can lead to unconsciousness and serious injury, including death.

WARNING

Before removing manifold parts or loosening fittings, remove the unit from on-line operations. Failure to do this may result in personal injury because of the pressure handled by the manifolds.

WARNING

Accidental contact of liquid gases with skin or eyes may cause a freezing injury similar to a burn. Handle liquid so that it will not splash or spill. Protect your eyes and cover skin where the possibility of contact with liquid, cold pipes and cold equipment, or cold gas exists. Safety goggles or a face shield should be worn if liquid ejection or splashing may occur or cold gas may issue forcefully from equipment. Clean, insulated gloves that can easily be removed and long sleeves are recommended for arm protection. Cuffless trousers should be worn outside boots or over the shoes to shed spilled liquid.

WARNING

If clothing should be splashed with liquid oxygen or otherwise saturated with the gas, air out clothing immediately, removing the clothing if possible. Such clothing will be highly flammable and easily ignited while concentrated oxygen remains, and should not be considered safe for at least 30 minutes.

CAUTION

Use only replacement equipment which is compatible with oxygen and has been cleaned for oxygen use. Do not use regulators, fittings, hoses, etc., which have been previously used in a compressed air environment. Similarly, do not use oxygen equipment for compressed air. Failure to comply with these instructions may result in serious damage to the manifold.

CAUTION

Before locating oxygen equipment, become familiar with the National Fire Protection Association (NFPA) Standard No. 50, "Bulk Oxygen Systems at Customer Sites", NFPA 99, "Health Care facilities", and with all local safety codes. The NFPA Standard covers general principles recommended for installing bulk oxygen systems and associated equipment on industrial and institutional consumer premises.

TABLE OF CONTENTS

Section/Para		Page
Preface		i
Safety Summary		ii
1 Introduction		1-1
1-1	General	1-1
1-2	Description	1-3
1-3	Operating Description	1-3
1-3-1	Four-Way Change Over Valve (V-1)	1-3
1-3-2	Line Regulator (R-1)	1-3
1-3-3	Preset Regulator (R-2)	1-3
1-3-4	Pressure Switch (PT)	1-3
1-3-5	Economizer Regulator (R-3)	1-3
1-3-6	Pressure Control Valve (RV-1)	1-3
1-3-7	Bleed Valve (V-2)	1-3
1-4	Specifications	1-3
1-5	Operator Qualifications	1-3
1-7	Maximum Attainable Delivery Rates	1-5
2 Operator Controls and Indicators		2-1
2-1	General	2-1
3 Operating Procedures		3-1
3-1	General	3-1
3-2	Change Out of Empty Cylinders	3-1
3-3	Change of Service	3-1
3-4	Adjustment of Regulators	3-1
4 Installation and Site Considerations		4-1
4-1	General	4-1
4-2	Site Considerations	4-1
4-2-1	Site Selection	4-1
4-2-2	Site Protection	4-1
4-2-3	Other Site Considerations	4-1
4-3	Installation	4-1
4-3-1	Electrical Hook-up	4-1
4-3-2	Connection to Hospital Reserve Kit	4-1
4-3-3	Cylinder Connection	4-1
4-4	Start-up Checks	4-2
5 Maintenance, Troubleshooting and Repair		5-1
5-1	General	5-1
5-2	Maintenance	5-1
5-2-1	Compatibility and Cleaning	5-1
5-2-2	Periodic Inspection	5-1
5-2-3	Soldering	5-1
5-3	Troubleshooting	5-1
5-4	Repair	5-3
5-4-1	Regulator Repair	5-3
5-4-2	Pressure Gauge Repair	5-4
5-5	Testing After Repair	5-4
6 Recommended Spare/Repair Parts List		6-1
6-1	General	6-1
7 Diagrams		7-1
7-1	General	7-1
Appendix A: Abbreviations and Acronyms		A-1
Appendix B: Optional Equipment/ Accessories		B-1
B-1	General	B-1
B-2	Hospital Reserve Kit	B-1
B-3	Add-On Vaporizer Packages	B-1
B-4	M-45 Mounting Stand	B-1
Appendix C: Safety Bulletin		C-1
C-1	General	C-1
C-2	Oxygen Deficient Atmospheres	C-1
C-3	Oxygen Enriched Atmospheres	C-1
C-4	Nitrogen and Argon	C-2
C-5	Nitrous Oxide	C-2
C-6	Carbon Dioxide	C-3

LIST OF ILLUSTRATIONS

Figure	Title	Page
1-1	MVE Model M-45 Manifold	1-1
1-2	M-45 Manifold Configurations	1-2
2-1	Operator Controls and Indicators	2-1
3-1	M-45 Manifold Test Stand Schematic	3-1
6-1	Manifold Model M-45 Parts Location View (Top and Front)	6-2
6-2	Manifold Model M-45 Parts Location View (Top and Side)	6-3
6-3	Add-On Vaporizer Package (Inert, Oxygen, CO_2 and N_2O Services)	6-4
6-4	Manifold Hose Assembly (Inert, Oxygen, CO_2 and N_2O Services)	6-4
7-1	Flow Schematic, M-45 Manifold	7-1
B-1	MVE Hospital Reserve Kit	B-1
B-2	MVE M-45 Manifold Mounting Stand	B-1

TABLES

Table	Title	Page
1-1	M-45 Manifold Specifications	1-4
2-1	Operator Controls and Indicators	2-2
3-1	Determining Regulator Settings	3-2
3-2	M-45 Economizer Regulator (R-3) Adjustment	3-2
3-3	M-45 Preset Regulator (R-2) and Pressure Switch (PS-1) Adjustment	3-3
3-4	M-45 Line Regulator (R-1) Adjustment	3-3
5-1	M-45 Periodic Inspection Intervals	5-1
5-2	M-45 Manifold Troubleshooting Procedures	5-2
5-3	Regulator Repair	5-3
6-1	Manifold Models M-45 Parts Identification	6-3
6-2	Add-On Vaporizer Package (Oxygen, Inert, CO_2 and N_2O Services) Parts Identification	6-5
6-3	Manifold Hose Assembly (Oxygen, Inert, CO_2 and N_2O Services) Parts Identification	6-5

1-1. GENERAL

The Minnesota Valley Engineering (MVE) Model M-45 Manifold (see Figure 1-1) provides continuous gaseous flow over an extended period of time. This is accomplished by manifolding two, four, or six liquid cylinders (see Figure 1-2); thus offering versatility for specific user applications. When six liquid cylinders are used, three are designated for primary use while the other three are maintained as a reserve bank. The primary supply flows until all three primary cylinders are depleted, at which time the M-45 Manifold automatically switches over to draw from the reserve cylinders. When this occurs, an indicator lamp is lighted indicating that the primary supply is empty.

The M-45 Manifold is designed to be used with the MVE DURA-CYL/DURA-MAX cryogenic containers, which use internal vaporizer coils. It can also be used in conjunction with DURA-CYL/DURA-MAX containers and external vaporizers. The M-45 Manifold can be used in oxygen, argon, nitrogen, nitrous oxide, or carbon dioxide gas service.

The M-45 Manifold Economizer Regulator is factory set at 150 PSIG for oxygen, argon, or nitrogen service. This setting is designed to be used with the MVE DURA-CYL cryogenic containers which have economizer regulator settings at 140 PSIG. The M-45 manifold is also available with the economizer regulator set at 330 PSIG for nitrous oxide or carbon dioxide service. This higher service is specifically designed for use with the MVE DURA-MAX cryogenic containers which have economizer regulator settings at 325 PSIG.

Figure 1-1. MVE Model M-45 Manifold

Manifold with two cylinders

Manifold with four cylinders

Manifold with six cylinders

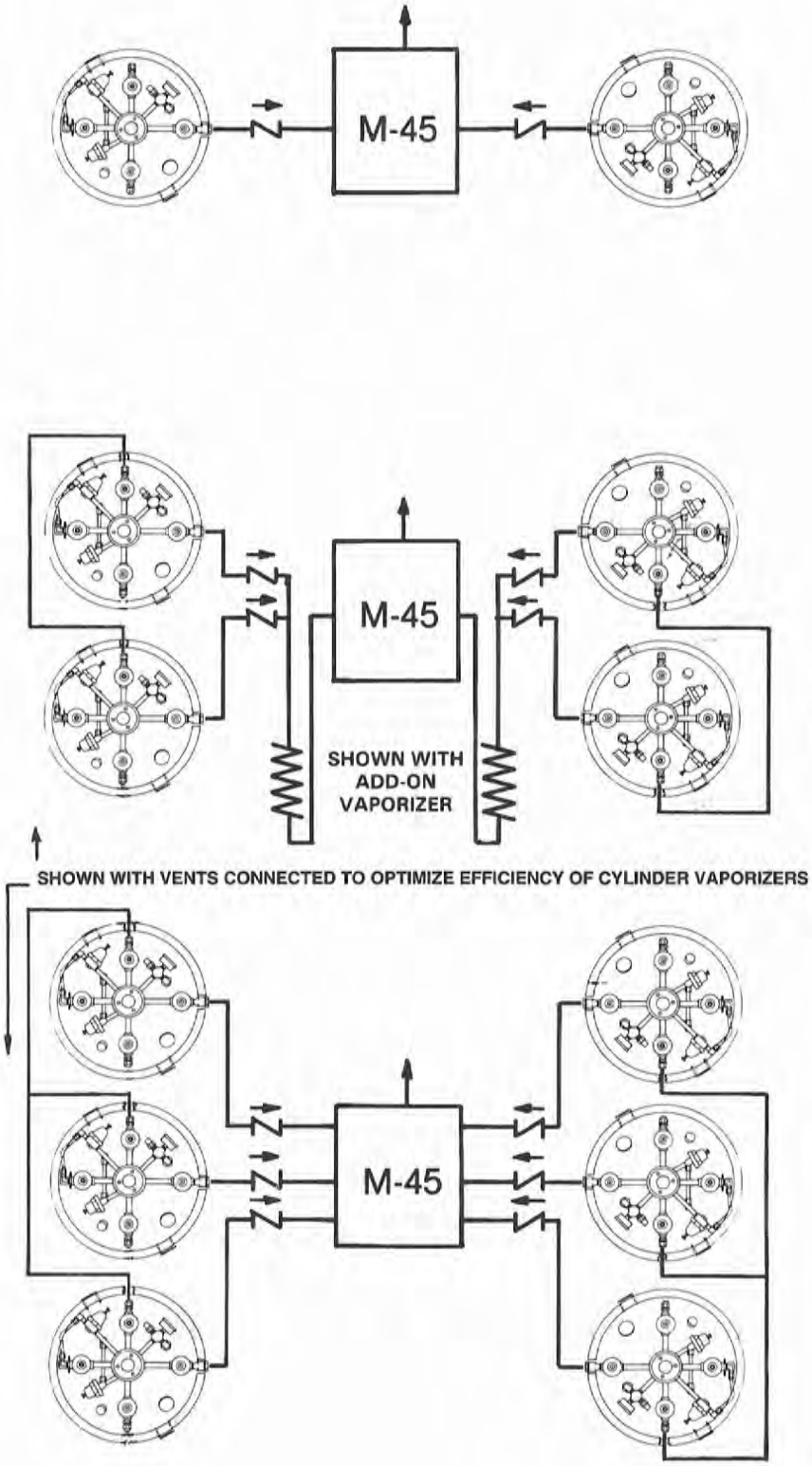

Figure 1-2. M-45 Manifold Configurations

1-2. PHYSICAL DESCRIPTION

The M-45 Manifold is built around a four-way change over valve. There are two headers to which the primary and reserve banks are attached. These headers are centered on opposite sides of the four-way valve. Final delivery pressure is determined by a line regulator and monitored on a pressure gauge. A preset regulator performs the automatic switching from the primary to the reserve bank of cylinders. An economizer regulator prevents the loss of product in the reserve bank due to excess pressure.

The normal delivery pressure range is from 5 to 250 PSIG, and can be set by adjustment of the line regulator (R-1). The manifold supplies gaseous product at a continuous flow rate of 325 SCFH (oxygen) or 110 SCFH (CO_2 gas). (Peak flow rates above 325 SCFH can be sustained for 20 minutes without reaching a minimum temperature of -20°F in the manifold; however, flow rates of over 325 SCFH should not be attempted if there is excessive frost build-up). Refer to Section 3 for ways to maximize delivery rates.

The M-45 Manifold consists of internal plumbing securely mounted inside a stainless steel container. Regulators and tubing are protected from overpressurization by a relief valve. The simple construction makes the system durable enough for many years of heavy use.

The M-45 Manifold is constructed in accordance with the National Fire Protection Agency Standard 99, for nonflammable medical gas systems for health care facilities.

1-3. OPERATING DESCRIPTION

The M-45 Manifold is controlled by the four-way change over valve, line regulator, preset regulator, pressure switch, economizer regulator, and pressure control valve.

1-3-1. Four-Way Change Over Valve (V-1)

The four-way change over valve connects the primary bank of cylinders to the reserve bank and, in conjunction with other components of the manifold, automatically routes gas from the reserve bank of cylinders when the primary bank is empty. NOTE: Valve handle position defines primary bank.

1-3-2. Line Regulator (R-1)

The line regulator determines the delivery pressure. Delivery pressure is also monitored on the delivery pressure gauge. The normal delivery pressure range is from 5 to 250 PSIG, and can be changed by adjustment of the line regulator. As shipped from the factory, the line regulator is set at 80 PSIG.

1-3-3. Preset Regulator (R-2)

The preset regulator is maintained in a closed position when the primary bank is at normal operating pressure (approximately 125 PSIG as indicated on the operating pressure gauge). When primary bank pressure falls below 100 PSIG, the preset regulator opens and gas flow from the reserve bank of cylinders begins automatically. The preset regulator is factory set at 100 PSIG on the M-45 Manifold.

1-3-4. Pressure Switch (PT)

The pressure switch controls the M-45 Manifold warning indicator lamp that is lighted when gas flow from the primary bank stops and gas flow from the reserve bank starts. The pressure switch, which is adjustable, is set so that the lamp will be lighted at the preset regulator setting. Note that remote warning systems can be easily triggered by the pressure switch.

1-3-5. Economizer Regulator (R-3)

The economizer regulator allows excess pressure in the reserve bank to be bled off into the line by opening a valve when the pressure in the reserve bank of cylinders exceeds 150 or 330 PSIG. This feature virtually eliminates any product from venting through the pressure control valve on the cylinders and being lost.

1-3-6. Pressure Control Valve (RV-1)

The pressure control valve protects the M-45 Manifold internal plumbing, tubing, and regulators from overpressurization when internal pressure exceeds 400 PSIG.

1-3-7. Bleed Valve (V-2)

The bleed valve is used during the regulator setting procedures to release pressure in the piping system. This allows the regulator to be set quickly, safely and accurately.

1-4. SPECIFICATIONS

M-45 Manifold specifications are summarized in Table 1-1.

1-5. OPERATOR QUALIFICATIONS

The M-45 Manifold is designed for safe and simple operation. The operator is expected to be knowledgeable of the nature of the gas(es) which is being used, as well as all applicable safety requirements. M-45 Manifold operating procedures are described in Section 3, and maintenance procedures in Section 5. To fully understand these procedures, we recommend the operator first become familiar with the M-45 Manifold controls and indicators described in Section 2.

Table 1-1. Manifold Specifications

DESCRIPTION	SPECIFICATIONS
Physical	
Height	$12^{3}/_{32}$ inches
Width	$12^{3}/_{32}$ inches
Depth	8 inches
Weight (approximate)	26 pounds
Gas Delivery Rate with one cylinder/bank (Continuous):	325 SCFH (Oxygen)/110 SCFH (CO_2)
Maximum Attainable Delivery Rate with multiple cylinders per bank (Continuous)	600 SCFH (Oxygen)/330 SCFH (CO_2)
NOTE See Section 1-7 for additional information on maximum delivery rate.	
Capacity (with six cylinders)	
Oxygen	27000 Cu. Ft.
Nitrogen	21780 Cu. Ft.
Argon	25800 Cu. Ft.
N_2O	19338 Cu. Ft.
CO_2	20112 Cu. Ft.
Normal Delivery Pressure Range	5-250 PSIG
Line Regulator Pressure Setting from Factory (See Note)	80 PSIG
Preset Regulator Pressure Setting (See Note)	100 PSIG
Economizer Regulator Range	140-350 PSIG
Economizer Regulator Setting (See Note)	150 or 330 PSIG
Pressure Switch Range	0-300 PSIG
Pressure Switch Setting (See Note)	100 PSIG
Material	
Internal Plumbing	Type L Copper Fittings & 304 Stainless Steel
Outer Container	T304 Stainless Steel (Polished)
Line Connections	$^{1}/_{4}$" FPT
Power Requirements	110 VAC

NOTE

See Table 3.1 for proper relationship between cylinder and M-45 regulator settings.

1-7 MAXIMUM ATTAINABLE DELIVERY RATES

CAUTION

Cold gas resulting from overdrawing the cylinders can damage the M-45 manifold and connecting hoses.

The gas delivery rate is the draw which can be maintained continuously without dropping to an excessively low outlet temperature. Outlet temperature is controlled by the effectiveness of the heat exchanger that warms gas from a liquid state. This heat exchanger is the vaporizer coil in the MVE cryogenic containers. The surroundings must be ideal for heat exchange if the container is to perform at its optimum. That means placing them in a warm place with low humidity.

While it would appear that two containers on a manifold bank would have twice the delivery rate of one, and that three cylinders would have three times the delivery of one, this is not normally the case. Since one container in a bank will usually take on a majority of the draw, the effectiveness of the remaining heat exchangers is not 100%.

The biggest reason for uneven flow is different head pressures in the containers. There is a tolerance in the regulators that hold that pressure, so one container will usually be pressurized a few PSIG higher than the others. If all containers were pressurized equally, the heat exchangers would be balanced and a better delivery rate would be attained. This can be done by connecting all vent connections on each bank with transfer hoses and opening the vent valves. Note that there will still be some uneven flow for reasons that cannot be controlled.

Under ideal conditions (72°F, 50% relative humidity) and with the vents connected, the maximum attainable continuous delivery rates are:

- One cylinder .....325 SCFH
- Two cylinders.....400 SCFH
- Three cylinders.....600 SCFH

If the system has three cylinders per bank with vents connected and frost is present on the hytron hoses or on the manifold piping, the system should be retrofitted with an add-on vaporizer package between the cylinders and the M-45. (See Appendix B-3.)

2-1. GENERAL

M-45 Manifold operating procedures specify that the operator be familiar with all controls and indicators. The cover must be removed to make any control adjustments. Two pressure gauges and a warning indicator are located on the front panel of the manifold. The four-way changeover valve is located on the bottom of the unit. All manifold controls and indicators, with appropriate reference designators, are shown in Figure 2-1. Table 2-1 lists and describes these controls and indicators.

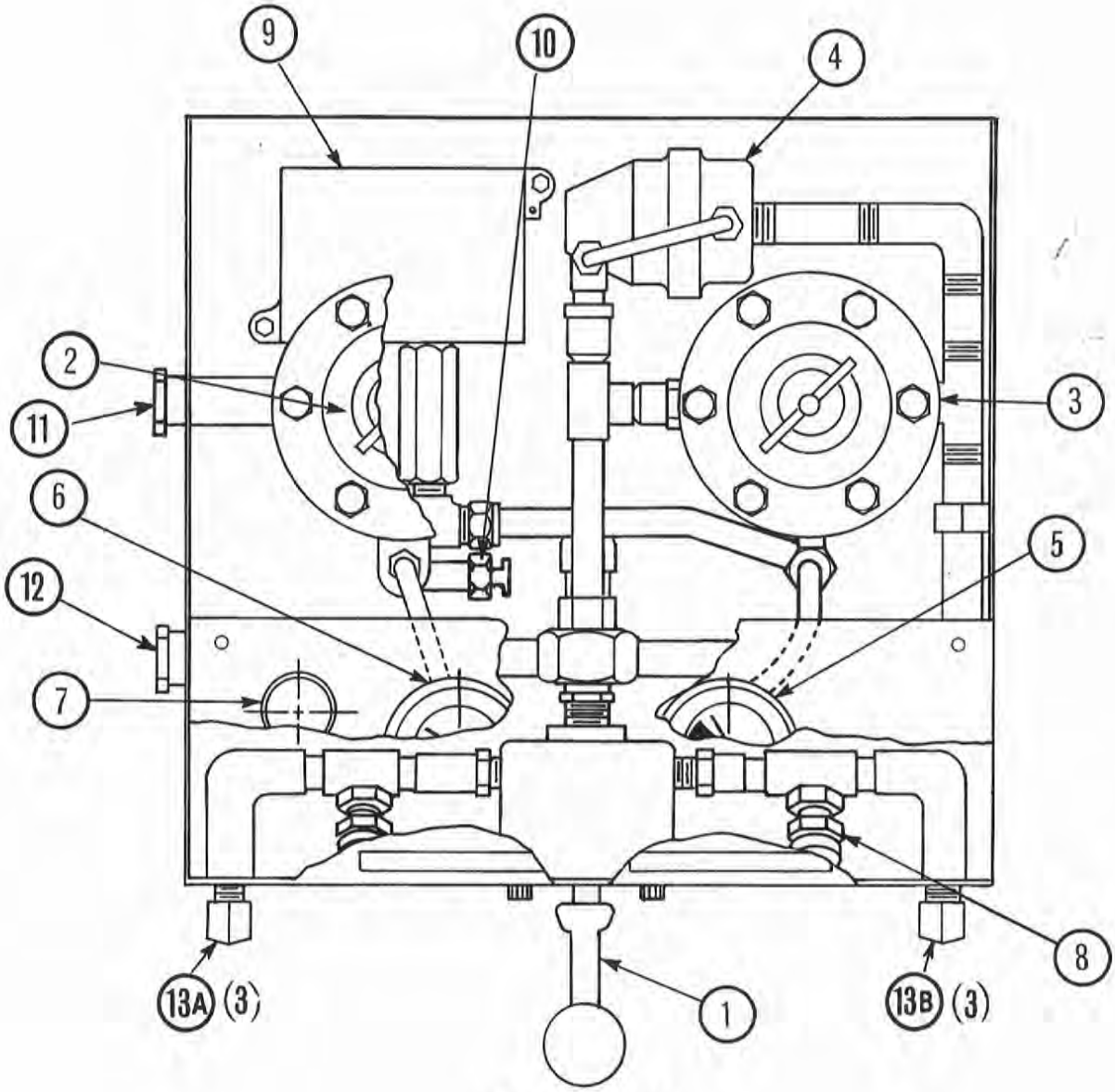

Front View

Figure 2-1. Operator Controls and Indicators

Table 2-1. Operator Controls and Indicators

ITEM NO.	CONTROL OR INDICATOR	DESCRIPTION
1	Four-way Changeover Valve (V-1)	Connects the primary bank of cylinders to the reserve bank, and automatically routes the gas from the reserve bank of cylinders when the primary bank is empty.
2	Line Regulator (R-1)	Determines delivery pressure which is monitored on gauge (G-2). The line regulator, which is adjustable, is factory set at 80 PSIG.
3	Preset Regulator (R-2)	Monitors primary bank pressure and opens when the pressure drops below 100 PSIG to allow gas flow to start from the reserve bank.
4	Economizer Regulator (R-3)	Eliminates any product from venting through the pressure control valve (RV-1) on the cylinders and being lost. The economizer regulator will open and bleed excess reserve bank pressure into the line if it reaches 150 or 330 PSIG.
5	Operating Pressure Gauge (G-1)	Indicates the pressure of the cylinders on the bank from which the gas is being drawn. The pressure reading, which should be approximately 125 PSIG, DURA-CYL (300 PSIG DURA-MAX) serves to keep regulator R-2 closed.
6	Delivery Pressure Gauge (G-2)	Indicates delivery pressure to the customer's use line. This pressure is determined by line regulator (R-1).
7	Warning Indicator	Indicates when gas flow from the primary bank stops and gas flow from the reserve bank starts. The pressure switch (PT) controls this function.
8	Pressure Control Valve (RV-1)	Protects regulators and tubing from overpressurization when internal pressure exceeds 400 PSIG.
9	Pressure Switch (PS)	Controls the warning indicator when the primary bank pressure drops below the preset regulator setting; set at 100 PSIG.
10	Bleed Valve (V-2)	Allows controlled release of pressure in the M-45 system. This is necessary to accurately set the regulators.
11	M-45 Outlet Connection	1/4" FPT connection
12	Hospital Kit Supply Connection	1/4" FPT connection point for auxiliary gas supply.
13A	Cylinder Supply Connection, Left Side (3)	1/4" FPT connection for cylinder hose.
13B	Cylinder Supply Connection, Right Side (3)	1/4" FPT connection for cylinder hose.

3-1. GENERAL

This section provides the procedures for changing empty cylinders, change of service, and adjustments to the preset regulator and pressure switch. Before performing any of the procedures contained in this section, become familiar with the location and function of the M-45 Manifold controls and indicators shown and described in Section 2.

3-2. CHANGE OUT OF EMPTY CYLINDERS

When the primary bank is empty, preset regulator R-2 automatically starts withdrawing gas from the reserve bank of cylinders. When this occurs, operating pressure gauge G-1 will indicate an operating pressure of 100 PSIG, and the gauge needle will point in the red area. This indicates that the primary bank to which the handle of the four-way valve points is empty. The warning lamp will also be lighted at this time.

To change out empty cylinders, turn the valve handle to point to the reserve bank of cylinders which now become the primary bank. The needle on G-1 should now move out of the red area and the warning lamp will be turned off. Check to be sure that the cylinders are indeed empty. Close the gas use and pressure building valves on the empty cylinders and disconnect the hoses at the cylinders. Replace the empty cylinders with full ones and reconnect the hoses. Open the gas use and the pressure building valves. These cylinders now represent the reserve bank.

3-3. CHANGE OF SERVICE

The M-45 Manifold can be used in oxygen, argon, nitrogen, nitrous oxide and carbon dioxide service. The only change necessary is the replacement of the hoses for the particular service desired. Refer to the Recommended Spare/Repair parts list for the proper hose.

3-4. ADJUSTMENT OF REGULATORS

The M-45 Manifold accommodates delivery pressures up to 250 PSIG. Any desired pressure up to this limit can be easily established by simply adjusting the line regulator and other regulators as listed in the tables below.

Figure 3-1 M-45 Manifold Test Stand Schematic

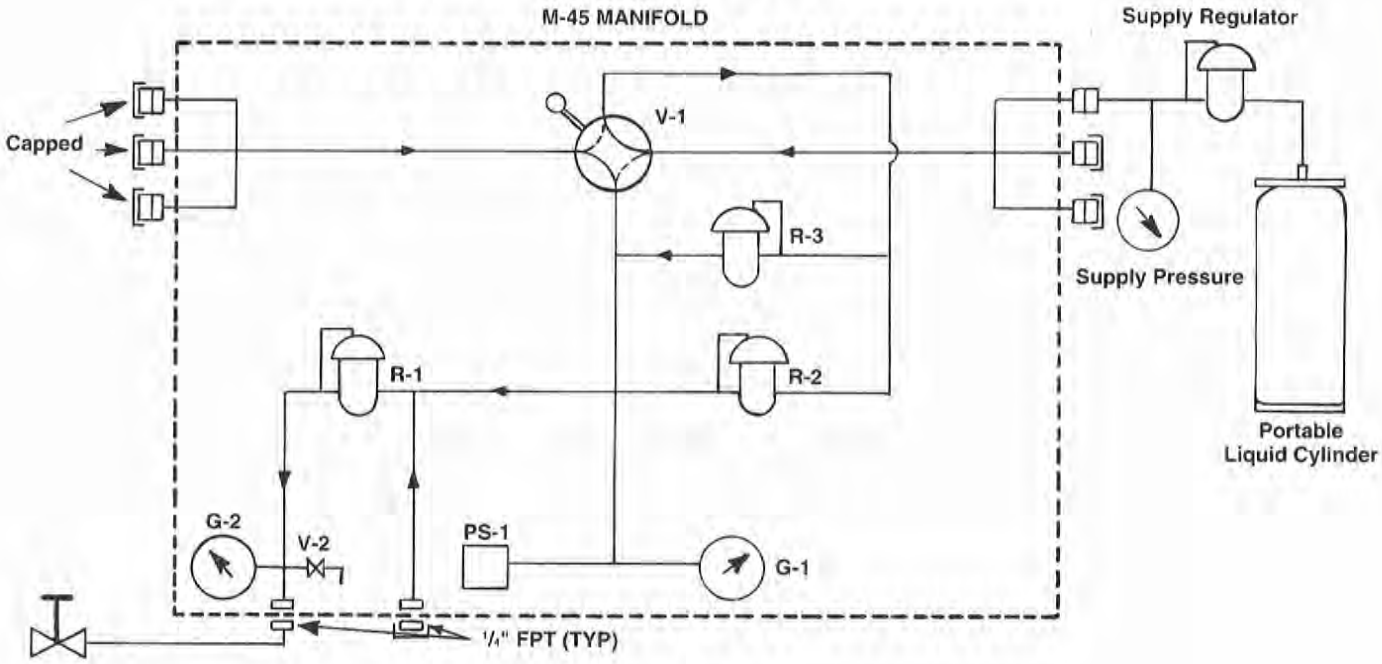

Table 3-1. Determining Regulator Settings

STEP NUMBER	PROCEDURES
1.	Choose your manifold outlet pressure. The M-45 Line Regulator should be set at this pressure.[1]
2.	Use the following table to determine the other system regulator and pressure switch settings to accommodate the outlet pressure.[1]

Component	Required Set Point	Factory Setting (psi) LP/HP[2]	Range (psi)
M-45 Line Regulator, R-1	———	80/80	5-250 psi
M-45 Preset Regulator, R-2	min. 20 psi over R-1	100/100	5-250
M-45 Pressure Switch, PS-1	same as R-2	100/100	0-300
Cylinder PB Regulators	min. 10 psi over R-2[3]	125/300	varies
Cylinder Economizer Regulators	min. 15 psi over PB	140/320	varies
M-45 Economizer Regulator	min. 10 psi over cyl. econ.	150/330	140-350
Hospital Kit Regulator, R-4	min. 15 psi over R-1	85/85	0-150
Hospital Kit Low Pressure Switch, PS-2	same as R-4	85/85	0-150
Hospital Kit Hi Pressure Switch, PS-3	min. 1000 psi	1000/1000	10-4000

Notes:

1. If highly varying flow rates occur and line pressure varies unacceptably with flow rate, a regulator should be installed just downstream of the M-45 Manifold. The M-45 Line Regulator, R-1, should then be set 20 psi higher than the final regulator. If pressure fluctuations still exist, call your local MVE distributor or MVE Technical Service at 1-800-253-1769.

2. LP refers to the M-45-LP manifold which has regulator set points optimized to operate with MVE Dura-Cyl cylinders. HP refers to the M-45-HP manifold which has regulators optimized to operate with MVE Dura-Max cylinders.

3. If the cylinder pressure builder regulator set points are greater than 10 psi over the M-45 Preset Regulator, R-2, the cylinder regulators should not be reset.

CAUTION: Disconnect the M-45 Manifold from electrical power before continuing with regulator adjustments.

Table 3-2. M-45 Economizer Regulator (R-3) Adjustment

STEP NUMBER	PROCEDURE
1.	Remove the cabinet cover on the M-45 Manifold.
2.	Connect a gas pressure supply to one bank of the M-45 Manifold as shown in Figure 3-1 and adjust the supply pressure to the desired M-45 Economizer Regulator (R-3) setting. Remove any other pressure sources from the M-45. **NOTE**: The gas supply should be regulated to allow you to quickly adjust supply pressure.
3.	Turn the Four Way Valve (V-1) handle toward the bank opposite the gas supply.
4.	Turn the Preset Regulator (R-2) pressure adjusting screw all the way out or it will interfere with the Economizer Regulator adjustment.
5.	Turn the Economizer Regulator pressure adjusting screw all the way in.
6.	Push the M-45 Bleed Valve (V-2) button to purge the pressure from the system, then slowly back out the Economizer Regulator pressure adjusting screw until you hear gas begin to flow through the regulator and the Operating Pressure Gauge (G-1) begins to rise. If the M-45 does not have a bleed valve, purge the pressure through a bleed valve in the piping system downstream of the manifold.
7.	Lock the Economizer Regulator jam nut. The Economizer Regulator is now set at the inlet gas supply pressure. The Operating Gauge will rise to the set pressure, confirming the set point. In operation, the Economizer Regulator will now allow gas from the reserve bank to flow into the line when the reserve bank cylinder pressure rises above the economizer set point.

Table 3-3. M-45 Preset Regulator (R-2) and Pressure Switch (PS-1) Adjustment

STEP NUMBER	PROCEDURE
1.	Reduce the gas supply pressure to at least 10 psi under the Economizer Regulator (R-3) setting but higher than the required Preset Regulator (R-2) setting.
2.	Turn the Four Way Valve (V-1) handle toward the bank opposite the gas supply. Turn the Preset Regulator adjustment screw all the way out.
3.	Push the M-45 Bleed Valve (V-2) button to release the pressure in the system. If the M-45 does not have a bleed valve, purge the pressure through a bleed valve in the piping system downstream of the manifold.
4.	Slowly turn the Preset Regulator adjusting screw clockwise until the operating pressure gauge (G-1) rises to the desired Preset Regulator setting.
5.	Lock the Preset Regulator jam nut. The Preset Regulator is now set at the pressure indicated by the Operating Pressure Gauge (G-1). In operation, the Preset Regulator will now allow gas from the reserve bank to flow into the system when the primary bank pressure drops to the Preset Regulator setting.
6.	Ensure the M-45 Manifold is disconnected from the electrical power. Remove the cover plate from the pressure switch.
7.	Verify the Operating Pressure Gauge still indicates the set pressure of the Preset Regulator.
8.	The alarm circuit is wired at the factory to be normally closed in a low pressure situation. Touch the two contacts of an ohmmeter to the terminal screws on the left (common terminal) and right (normally closed terminal) of the pressure switch.
9.	If the circuit is closed, turn the adjusting nut (indicated with red dye) counterclockwise until the test meter shows that the circuit is open. Then turn the nut clockwise again until the contacts just close.
10.	Verify that the pressure switch goes into alarm mode when the pressure drops to the Preset Regulator setting by turning the 4-Way Valve handle momentarily to the same side as the gas supply, then turning it back to the opposite side. Push the M-45 Bleed Valve button to bleed the pressure back down to the Preset Regulator setting, simulating an empty primary cylinder bank. The Pressure Switch should again toggle closed.

Table 3-4. M-45 Line Regulator (R-1) Adjustment

STEP NUMBER	PROCEDURE
1.	Repeat Steps 1 through 2 from Table 3-2.
2.	Turn the M-45 Line Regulator (R-1) adjustment screw all the way out then push the M-45 Bleed Valve (V-2) to release the pressure in the system. If the M-45 does not have a bleed valve, purge the pressure through a bleed valve in the piping system downstream of the manifold. The Delivery Pressure Gauge (G-2) should now read 0 psi.
3.	Turn the M-45 Line Regulator adjustment screw clockwise slowly until the Delivery Gauge indicates the desired line pressure.
4.	Lock the Line Regulator jam nut. The Line Regulator is now set at the pressure indicated by the Delivery Pressure Gauge. In operation, the Line Regulator will now deliver gas to the system at the set pressure.

4-1. GENERAL

This section describes installation and site considerations. Covered under site considerations are instructions relating to site selection and equipment protection. The installation discussions include electrical hook-up, connection to a Hospital Reserve Kit, cylinder connection, and start-up.

4-2. SITE CONSIDERATIONS

4-2-1. Site Selection

The Model M-45 Manifold may be located outside. The site selected should be such that the containers and associated equipment will not be under or directly exposed to electrical power lines, or exposed to flammable or combustible liquid/gas lines. If the M-45 Manifold is located inside, the area of the building where it is to be located should be constructed of noncombustible materials and be adequately vented.

The M-45 Manifold should be securely mounted in a safe place above the level of the liquid cylinders, and in an upright position. There are mounting holes in the back of the stainless steel case for this purpose.

4-2-2. Site Protection

In many situations, the manifold is vulnerable to damage. This may be due to tampering by unauthorized personnel, other equipment moving in the area, or a combination of the two. When selecting a site for the manifold, considerations should be given to these possibilities.

4-2-3. Other Site Considerations

- Local building and fire codes must be followed when selecting the site and sizing the gas supply system. When the M-45 is used in the gas supply system at a health care facility, the installer should reference the National Fire Protection Association (NFPA) publication, NFPA 99, "Health Care Facilities". For large oxygen systems, the installer should reference the NFPA publication, NFPA 50, "Bulk Oxygen Systems at Consumer Sites".*
- Installation of an M-45 Manifold should be supervised by personnel familiar with their construction and intended use.
- Following installation, all field erected piping and connect points should be checked for leaks at the maximum operating pressure.
- When the installation is dedicated to oxygen service, the M-45 Manifold site must be permanently placarded to indicate the following, or an equivalent type of warning:

OXYGEN
NO SMOKING
NO OPEN FLAMES

- Each system installed on consumer premises should be inspected annually.
- When the installation is dedicated to CO_2 or N_2O service, the liquid cylinder vaporizer is inefficient at ambient temperatures below 10 °F.
- If during site preparation any questions arise concerning foundation, location, etc., it is advised that you consult your local MVE distributor or the factory.

4-3. INSTALLATION

4-3-1. Electrical Hook-up

The M-45 Manifold electrical circuit runs on 110 VAC power. Use applicable state and local codes as a guide for installation. The standard indicator light has a 110-volt bulb as supplied from the factory. If a lower voltage service is required, hook up to a correct voltage transformer and install a proper voltage bulb in the lamp.

4-3-2. Connection to Hospital Reserve Kit

High pressure cylinders are connected to the hospital reserve kit at the CGA fitting on the right side of the unit. From the flare fitting on the left side of the hospital reserve kit, run tubing to the hospital kit connection on the M-45 Manifold; MVE can supply a low pressure pigtail for this purpose.

CAUTION

Do not use the hospital kit pigtail in high pressure services.

The hospital reserve kit regulator should be set above the M-45 Manifold line regulator setting and at least 10 or 15 PSIG below the M-45 preset regulator setting. If this is done, there will be no drain off of the high pressure cylinders and the line pressure and flow rate will be maintained after the primary liquid cylinders are emptied.

For complete details on the use of the hospital reserve kit, refer to the MVE Hospital Reserve Kit User's Manual.

* National Fire Protection Association
Batterymarch Park
Quincy, MA 02269

4-3-3. Cylinder Connection

CAUTION

Never connect a high pressure cylinder directly to the M-45 Manifold.

Connect the proper hoses on the outside of the M-45 Manifold. The unit has only one port open when shipped from the factory, so if more than one cylinder will be connected to each side, the plugs must first be removed from those ports. Then connect the hoses to the cylinders. Open the use and pressure building valves on all of the cylinders. After pressure has built up, turn the handle of the four-way valve toward the bank which you want to be designated as the primary bank. Next, adjust line regulator R-1 to the desired pressure setting by turning the regulator adjusting screw until the correct setting appears on the delivery pressure gauge. The line regulator is set at the factory to 80 PSIG. Be careful not to overtighten the connections and be sure to leak test all connections with an approved leak test solution so they are leak free under pressure.

- The optimum number of cylinders on each bank of the M-45 should provide about seven days capacity. With too many cylinders, excessive gas will be drawn from the reserve bank cylinders through the economizers leaving inadequate reserve when the primary bank runs out. If there are too few cylinders, the system will require constant attention to maintain gas supply. Adequate vaporization capacity must also be provided to assure a warm gas supply to the manifold during peak demand periods.

4-4. START-UP CHECKS

The M-45 Manifold was designed to be as compact, economical, and safe as possible. Prior to placing the unit on-line, consider the following:

- Never apply high pressure to an M-45 Manifold.
- Never leave a manifold four-way valve in the middle position.
- Be cautious about overtaxing the manifold with higher flow rates than recommended. There is a possibility of regulator diaphragm damage or transfer hose cracking if extremely cold temperatures are encountered.
- Under no conditions should the manifold cover be left off; it should only be removed when changing an internal setting. If the pressure switch is installed, never remove the cover without first disconnecting the electrical cord.

5-1. GENERAL

This section contains M-45 Manifold maintenance information, including troubleshooting and repair procedures. Service and/or repairs are not difficult because parts are easily accessible and replaceable. Before performing any of the procedures in this section, be sure you are familiar with the location and function of M-45 Manifold controls and indicators as shown and described in Section 2. Parts location views are provided in Section 6.

5-2. MAINTENANCE

5-2-1. Compatiblity and Cleaning

It is essential to always keep the M-45 Manifold clean and free from grease and oil. This applies not only to containers used in oxygen service, but also to those used in nitrogen and argon service.

When replacing components, use only parts which are considered compatible with oxygen and which have been properly cleaned for oxygen service. (Refer to CGA Pamphlet G.4.1. "Equipment Cleaned for Oxygen Service".) Do not use regulators, fittings, or hoses which were previously used in a compressed air environment. Only oxygen compatible sealants or Teflon tape should be used on the threaded fittings. All new joints should be leak tested with an oxygen compatible leak test solution. When degreasing parts, trichloroethylene, 1-1-1 trichloroethane (methyl chloroform), or other suitable solvent should be used.

5-2-2. Periodic Inspection

In order to maintain the manifold in good operating condition, certain system components should be inspected on a periodic basis. Those components requiring periodic inspection are listed in Table 5-1. If the manifold is being operated in areas having either extremely hot or cold climates, the inspection intervals should be shortened.

5-2-3. Soldering

Before performing any soldering work on the manifold, always exhaust oxygen from oxygen lines and purge with inert gas.

Table 5-1. M-45 Manifold Periodic Inspection Intervals

ITEM	INTERVAL
Valves and fittings for leaks and other malfunctions	Quarterly
Regulators for malfunction	Annually
Indicator gauges for malfunction	Annually
Relief valves to verify proper settings	2 Years

5-3. TROUBLESHOOTING

Table 5-2 provides detailed manifold troubleshooting procedures. The table is arranged in a Trouble/Probable Cause/Remedy format. Note that probable causes for a specific problem are listed in descending order of significance. That is, check out the first cause listed before proceeding to the next. Repair procedures required, as listed in the remedy column, may be found in the Repair paragraphs of this section. Perform procedures in the order listed and exactly as stated (refer to Section 6 as required to locate system components identified in the troubleshooting table).

Table 5-2. M-45 Manifold Troubleshooting Guide

PROBLEM	POSSIBLE CAUSE	SOLUTION
Failure to maintain pipeline at the desired pressure. Unacceptable fluctuations in outlet pressure. High pressure or low pressure alarms. Unacceptable fluctuations in outlet pressure.	Low cylinder liquid level.	Replace low cylinders with full cylinders.
	Improperly set line regulator (R-1) or preset regulator (R-2).	Adjust regulators per instructions in Tables 3-1 through 3-4.
	Dirt on regulator valve seat.	Refer to Table 5-3 for cleaning/repair instructions.
	Damaged or defective regulator.	Refer to Table 5-3 for cleaning/repair instructions. Readjust regulators per instructions in Tables 3-1 through 3-4.
	Relief Valve (RV-1) leaking, frozen or damaged.	Warm the relief valve and soap test. Replace if it doesn't seal when warm.
	Varying flowrates cause fluctuations in M-45 line regulator (R-1) outlet pressure.	Install a second line regulator downstream of the M-45 manifold. Set pressures according to Table 3-1.
Unacceptable outlet pressure fluctuations and frost on manifold piping or hoses.	Cold gas resulting from overdrawing the liquid cylinders is hindering the regulators' effectiveness or has damaged regulators.	Allow M-45 to warm up.
	Liquid cylinder vents are not connected resulting in poor utilization of cylinder vaporizers.	Connect the vents on the cylinders in each bank together to equalize flowrate from each cylinder. (See Section 1.7)
	Average demand is greater than cylinder bank can supply without auxiliary vaporizer.	Connect an add-on vaporizer package between the M-45 and each bank of cylinders. (See Appendix B-3)
		If there are less than three cylinders per bank, add one cylinder per bank. Total weekly usage must be considered when evaluating the number of cylinders in the system.
		If usage patterns are constantly higher than the maximum attainable delivery rate, an MVE customer station is recommended for the application.
	Peak demand is greater than cylinder banks can supply without auxiliary vaporizer.	Install a vaporizer between the cylinders and each bank of the manifold, sized to accommodate the peaks. (1000 SCFH max.)
Both cylinder banks get empty at the same time. Inadequate reserve when primary bank is empty.	Too much liquid capacity for the application. Reserve bank is economizing at nearly the same rate as the primary bank. If the cylinders need replacing less than once every 7-14 days, there is probably too much liquid on hand for the application.	If there are more than one cylinder per bank, remove one cylinder per bank. If there is only one cylinder per bank, use a liquid cylinder primary supply with a high pressure backup or a high pressure gas primary and backup system. (Do not connect high pressure cylinders directly to the M-45)
Erratic or erroneous pressure gauge readings.	Leaking gauge lines.	Soap test and repair any leaks.
	Gauge needle is stuck.	Tap gauge. If needle does not return to correct position, replace gauge.
	Gauge damaged or faulty.	Replace gauge.

5-4. REPAIR

Replacement, rather than repair, of damaged components with MVE approved parts is recommended. However, when repair of damaged components is required (in those instances when a spare part is not readily available), follow the instructions provided in the following paragraphs.

When disassembly of a manifold assembly is required, removed parts should be coded to facilitate reassembly. Reassembly of parts should always be performed in the reverse manner in which they were disassembled. Parts removed during disassembly should be protected from damage, thoroughly cleaned, and stored in protective polyethylene bags if not immediately reinstalled. Clean all metal parts with a good industrial cleaning solvent. All rubber components should be washed in a soap and warm water solution.

Air dry all cleaned parts using an oil-free, clean, low-pressure air source or nitrogen gas. Before reassembly, make sure that all parts are thoroughly cleaned and have been degreased. Cleaning will prevent valves and regulators from freezing while in service and also prevent contamination of the gaseous product.

When removing assemblies from the manifold, remember to always plug pipe openings as soon as they are exposed. Plastic pipe plugs or a clear plastic film may be used for this purpose.

5-4-1. Regulator Repair

When a defective pressure regulator (R-1 or R-2) or economizer regulator (R-3) is identified, remove and repair the unit as detailed in Table 5-3.

Table 5-3. Regulator Repair

STEP NUMBER	PROCEDURE
	NOTE Unless regulator component parts are available in your inventory, a defective regulator should always be replaced with a new assembly.
1	Disconnect the manifold from the cylinders.
2	Unplug the manifold from the site AC power source.
3	Remove the manifold front cover.
4	Once the manifold has stabilized at room ambient temperature, remove the defective regulator from the manifold.
5	Disassemble the regulator, making sure to identify all piece parts removed.
6	Inspect each part for wear, deformation, or damage. Replace all gaskets removed with new ones.
7	Clean all metal parts with a good industrial cleaning solvent. Air dry with a clean, low-pressure air source.
8	Reassemble the regulator in the reverse order of disassembly. Note that a common mistake that occurs in reassembling the economizer regulator is in the fitting of the valve vs. the seat. The valve fits against the sharp edge, not the chamfered edge.
9	Bench test the rebuilt unit to make sure that it opens properly at the set pressure.
10	If the regulator is to be reinstalled on the manifold, do so as soon as possible following repair. If it is to be returned to inventory, seal the unit in a polyethylene bag for storage. Apply a label to the bag such as "CLEAN REGULATOR, DO NOT OPEN BAG UNLESS UNIT IS TO BE INSTALLED".
11	Silver solder all joints except for the pipe threads. Use Teflon tape on all threaded joints.
12	Once the regulator is reinstalled, close the manifold cover and plug the power cord into the site AC outlet.
13	Reconnect the manifold to the cylinders.
14	Allow pressure to build up in the system and then verify the reliability of the rebuilt unit.

5-4-2. Pressure Gauge Repair

Since an instrument specialist is normally required for making gauge repairs, it is advised that a defective gauge be replaced with a new unit and the defective one returned to your local MVE distributor or to the factory for repairs. However, before replacing a gauge there are a number of checks that can be performed.

CAUTION

Always relieve any pressure on the manifold before removing parts.

The major cause of gauge malfunction is a leakage in the gauge line. Therefore, as a first check, make certain that gauge lines are leak-tight. Other gauge checks include:

1. Checking gauge lines for obstructions.
2. Checking for a leaky valve.
3. Ensuring that all connection lines are properly mated.
4. Verifying that the gauge is properly zeroed.
5. Ensuring that the pointer is not sticking.

If the above checks fail to correct the problem, remove and replace the defective gauge. When returning a gauge to MVE for repair, indicate the nature of the difficulty experienced with the gauge in your letter of transmittal.

5-5. TESTING AFTER REPAIR

After reassembly, the manifold should be pressurized from the primary and reserve ports, and all joints leak tested with an approved leak test solution.

6-1. GENERAL

This section contains recommended spare and repair parts data for the Model M-45 Manifold. Spare parts can be obtained from your local MVE distributor or the factory. When ordering parts always specify the complete part number with the nomenclature provided in the parts list.

The parts list and illustrations are coordinated so that an item number for a part on the parts list is the same number used to identify that part on the supporting illustration.

The following illustrations and parts lists are provided in this section:

Figure 6-1. Manifold Model M-45 Parts Location View (Top and Front)
Figure 6-2. Manifold Model M-45 Parts Location View (Top and Side)
Figure 6-3. Add-On Vaporizer Package (Inert, Oxygen, CO_2 and N_2O Services)
Figure 6-4. Manifold Hose Assembly (Inert, Oxygen, CO_2 and N_2O Services)

Table 6-1. Manifold Model M-45 Parts Identification
Table 6-2. Add-On Vaporizer Package (Inert, Oxygen, CO_2 and N_2O Services) Parts Identification
Table 6-3. Manifold Hose Assembly (Oxygen, Inert, Co_2 and N_2O Services) Parts Identification

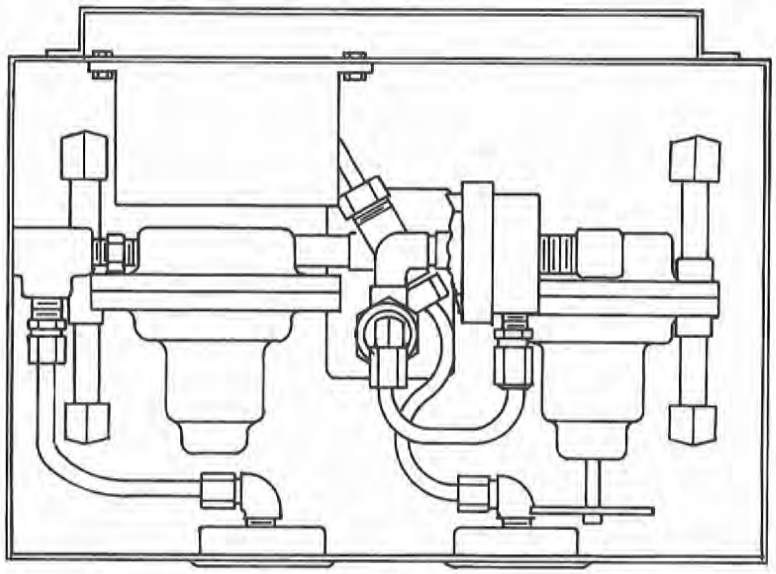

Top View

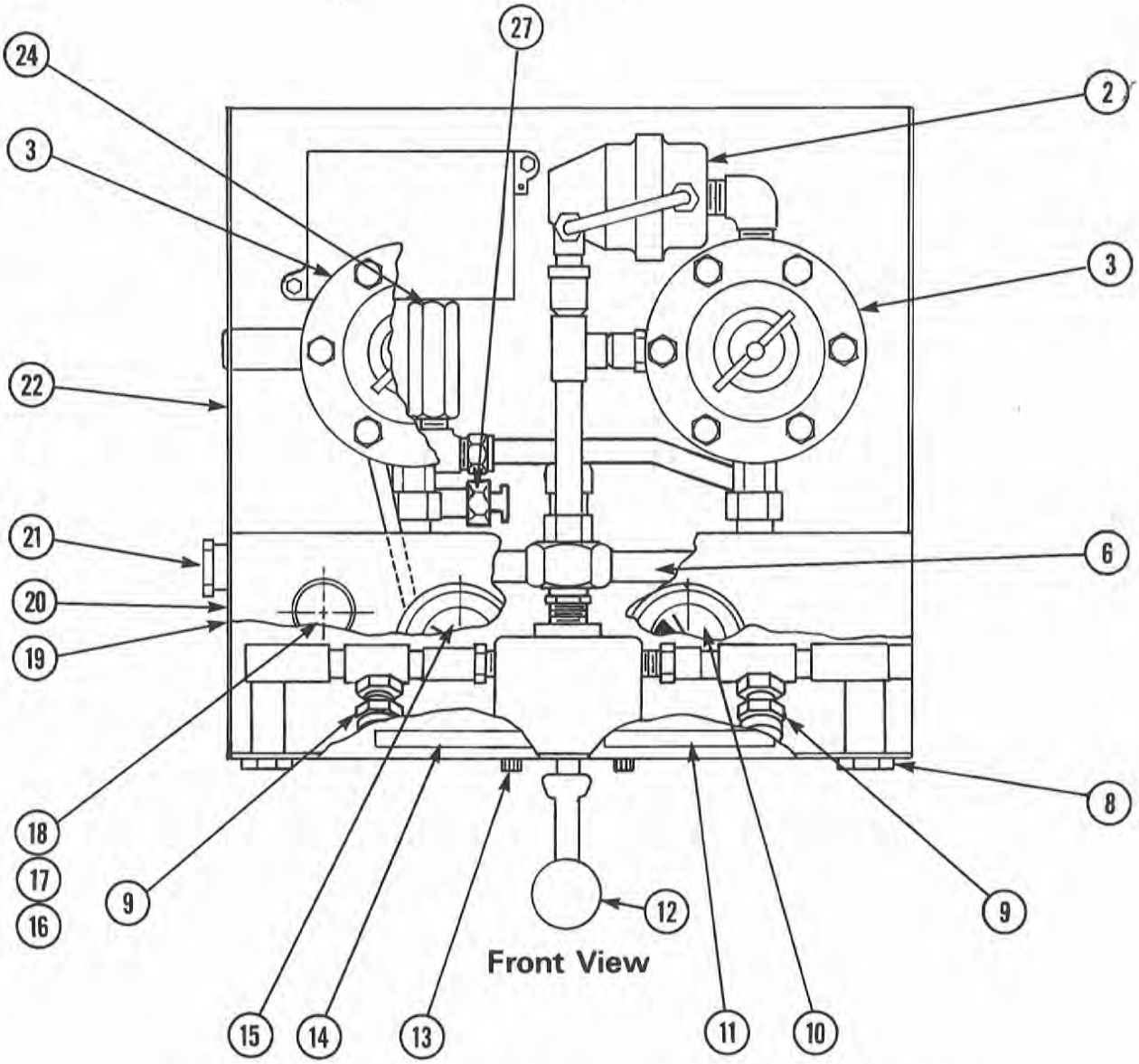

Figure 6-1. Manifold Model M-45 Parts Location View (Top and Front)

Figure 6-2. Manifold Model M-45 Parts Location View (Top and Side)

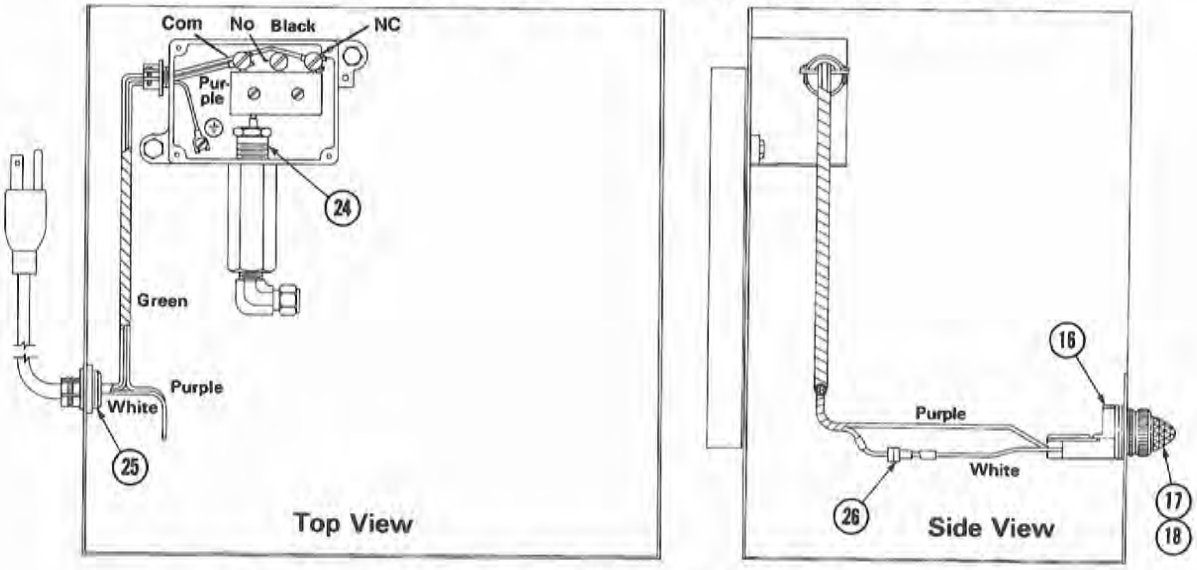

Table 6-1. Manifold Models M-45 Parts Identification (Figures 6-1 and 6-2)

Item No.	Part No.	Qty. Per Assembly	Recommended Spares Qty.	Part Name
2	21-1002-2 (LP Only) 21-1075-2 (HP Only)	1	–	REGULATOR, Economizer, 1/4" NPT Side Outlet x 1/4" NPT Bottom Outlet, Range 140-350 PSIG
3	21-1083-2 97-1567-9	2	–	REGULATOR, 1/4" NPT REGO 1682 YS Range 5-250 (Factory Set at 80 PSIG for R-1 and at 100 PSIG for R-2) Repair Kit for 21-1083-2
9	18-1080-2	2	1	VALVE, Relief, 1/4" MPT, 400 PSIG
10	20-1020-4	1	1	GAUGE, Pressure, 2" Dial, 0-400 PSIG, 1/8" CBM
11	38-1111-9	1	–	LABEL, "OPERATING PRESSURE"
12	17-1131-2 43-1070-9	1	1	VALVE, 4-Way, Manual Replacement Handle for 4 Way Valve
13	29-1021-1	4	–	SCREW, Cap, Socket Head, 10-24 UNC x 1/2" Long
14	38-1110-9	1	–	LABEL, "DELIVERY PRESSURE"
15	20-1005-4	1	1	GAUGE, Pressure, 2" Dial, 0-400 PSIG, 1/8" CBM
16	46-1209-9	1	–	INDICATING LAMP ASSEMBLY
17	46-1139-9	1	1	LENS, Red
18	46-1210-9	1	1	LIGHT BULB, 110-Volt (Neon B2A)
19	38-1135-9	1	1	LABEL, "WARNING: DO NOT CONNECT HIGH PRESSURE CYLINDERS DIRECTLY TO MANIFOLD"
20	38-1112-9	1	1	LABEL, "HOSPITAL KIT"
21	16-1032-3	1	–	ADAPTOR, Female, 3/8" NOM x 1/4" FPT
22	32-1132-9	1	–	LABEL, "GAS USE"
24	20-1104-9	1	1	SWITCH, Pressure, 1/4" FPT
25	46-1034-9	1	–	CONNECTOR, Romex, 3/8"
26	46-1066-9	1	1	FUSE, 3AG, SLO-BLOW, 1 AMP
27	17-1413-2	1	1	VALVE, Poppet, Manual Bleed 1/8" NPT

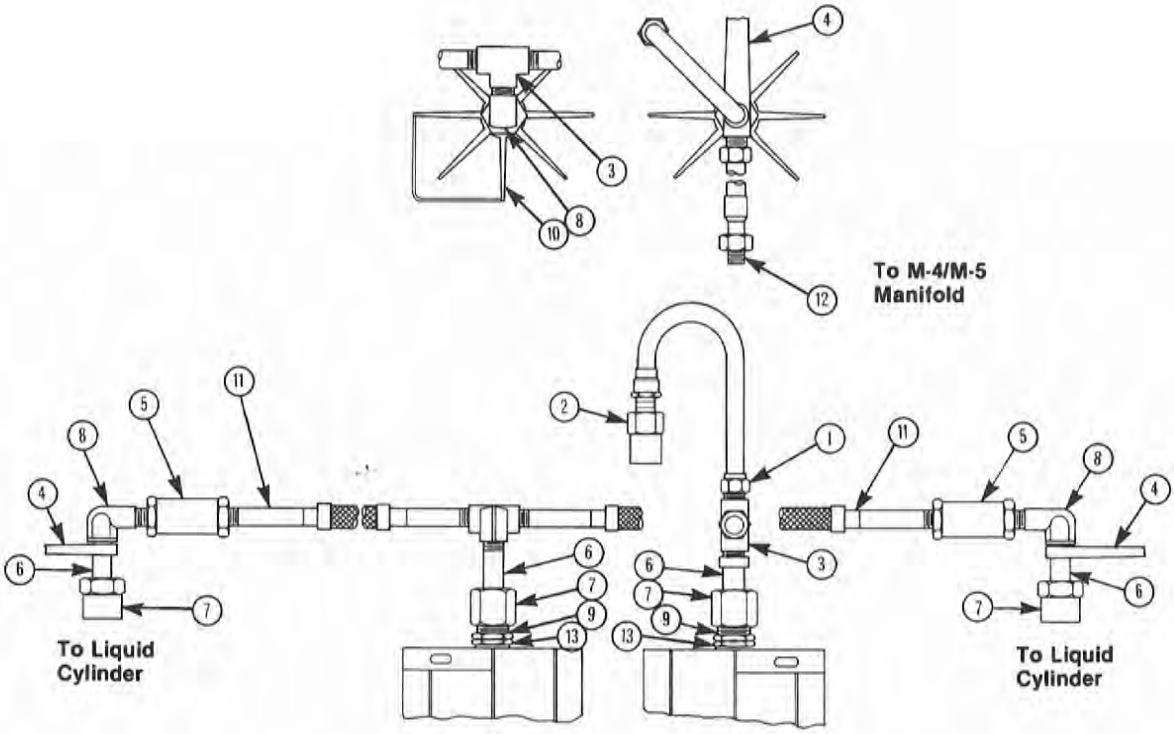

Figure 6-3. Add-On Vaporizer Package

Oxygen	P/N 97-1292-9
Inert	P/N 97-1293-9
Carbon Dioxide	P/N 97-1298-9
Nitrous Oxide	P/N 97-1297-9

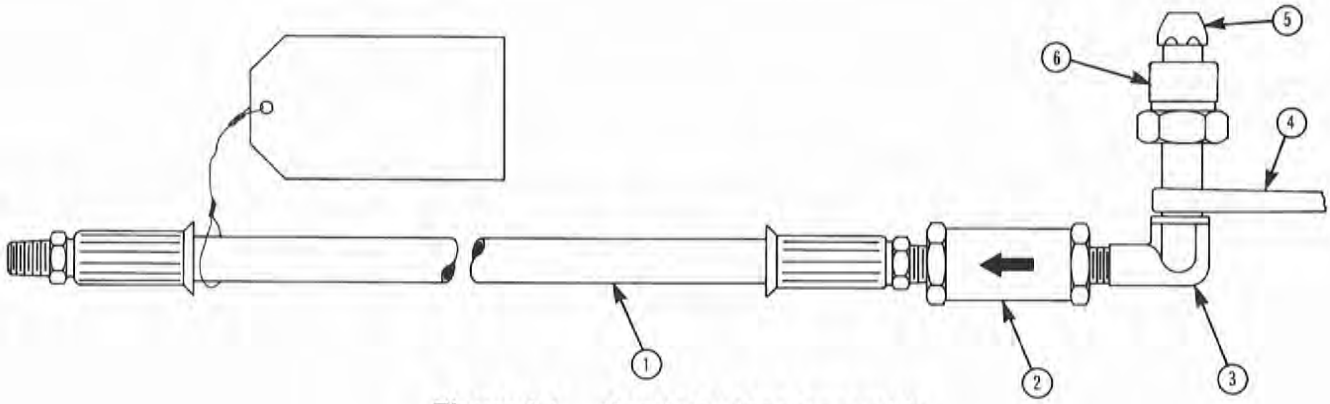

Figure 6-4. Manifold Hose Assembly

Nitrogen or Argon	P/N 97-1327-2
Oxygen	P/N 97-1326-2
Carbon Dioxide	P/N 97-1331-2
Nitrous Oxide	P/N 97-1330-2

Table 6-2. Add-On Vaporizer Package (Inert, Oxygen, CO_2 and N_2O Services) Parts Identification (Figure 6-3)

Item No.	Gas Service	Part No.	Qty. Per Assembly	Recommended Spares Qty.	Part Name
1		16-1074-2	1	—	ADAPTER, Male, ⅜" C × ¼" MPT
2	CO_2	18-1080-2	1	1	VALVE, Relief, 400 PSIG, ¼" MPT
2		18-1046-2	1	1	VALVE, Relief, 350 PSIG, ¼" MPT
3		12-1062-2	2	—	TEE, ¼" FPT
4		43-1021-2	3	—	HANDLE, Wrench-Type
5		17-1123-2	2	1	VALVE, Check, ¼" FPT
6	Oxygen	40-1015-2	4	—	NIPPLE, ¼" MPT × 2½", Type CGA-540
6	Inert	40-1012-2	4	—	NIPPLE, ¼" MPT × 3½", Type CGA-580
6	CO_2	40-1029-2	4	—	NIPPLE, ¼" NPT × 2½", Type CGA-320
6	N_2O	40-1030-2	4	—	NIPPLE, ¼" NPT × 2⅛", Type CGA-326
7	Oxygen	40-1017-2	4	—	NUT, Type CGA-540
7	Inert	40-1013-2	4	—	NUT, Type CGA-580
7	CO_2	40-1028-2	4	—	NUT, Type CGA-320
7	N_2O	40-1031-2	4	—	NUT, Type CGA-326
8		12-1046-2	3	—	ELBOW, Street, 90° Flare, ¼" MPT
9	Oxygen	40-1002-2	2	—	OUTLET, ⅜" MPT, Type CGA-580
9	Inert	40-1001-2	2	—	OUTLET, ⅜" MPT, Type CGA-540
9	CO_2	40-1022-2	2	—	OUTLET, ½" MPT
9	N_2O	40-1024-2	2	—	OUTLET, ½" MPT
10	Oxygen Inert	97-1450-9	1	—	VAPORIZER, Free Standing, 250 SCFH
10	CO_2 N_2O	97-1276-9	1	—	VAPORIZER, Free Standing, 200 SCFH
11		37-1057-1	2	—	HOSE ASSEMBLY, Vaporizer
12		37-1022-7	1	—	HOSE, ⅜" Nominal × 6', Hytron
13	CO_2 N_2O	12-1116-2	2	—	ADAPTER, ½" FPT × ⅜" MPT

Table 6-3. Manifold Hose Assembly (Oxygen, Inert, CO_2 and N_2O Services) Parts Identification (Figure 6-4)

Item No.	Part No.	Qty. Per Assembly	Recommended Spares Qty.	Part Name
1	37-1022-7	1	—	HOSE, ⅜" Nominal × 6', Hytron
2	17-1123-2	1	1	VALVE, Check, ¼" FPT
3	12-1046-2	1	—	ELBOW, Street, 90° Flare, ¼" MPT
4	43-1021-2	1	—	HANDLE, Wrench-Type
5	40-1030-2	1	—	NIPPLE, ¼" NPT × 2⅛", Type CGA-326 (N_2O)
5	40-1029-2	1	—	NIPPLE, ¼" NPT × 2½", Type CGA-320 (CO_2)
5	40-1012-2	1	—	NIPPLE, ¼" MPT × 2½", Type CGA-580 (Argon or Nitrogen)
5	40-1015-2	1	—	NIPPLE, ¼" MPT × 2½", Type CGA-540 (Oxygen)
6	40-1031-2	1	—	NUT, Type CGA-326 (N_2O)
6	40-1028-2	1	—	NUT, Type CGA-320 (CO_2)
6	40-1013-2	1	—	NUT, Type CGA-580 (Argon or Nitrogen)
6	40-1017-2	1	—	NUT, Type CGA-540 (Oxygen)

7-1. GENERAL

This section provides the operator with a detailed flow schematic of the Model M-45 Manifold. Refer to this diagram (figure 7-1) if necessary during container troubleshooting or maintenance.

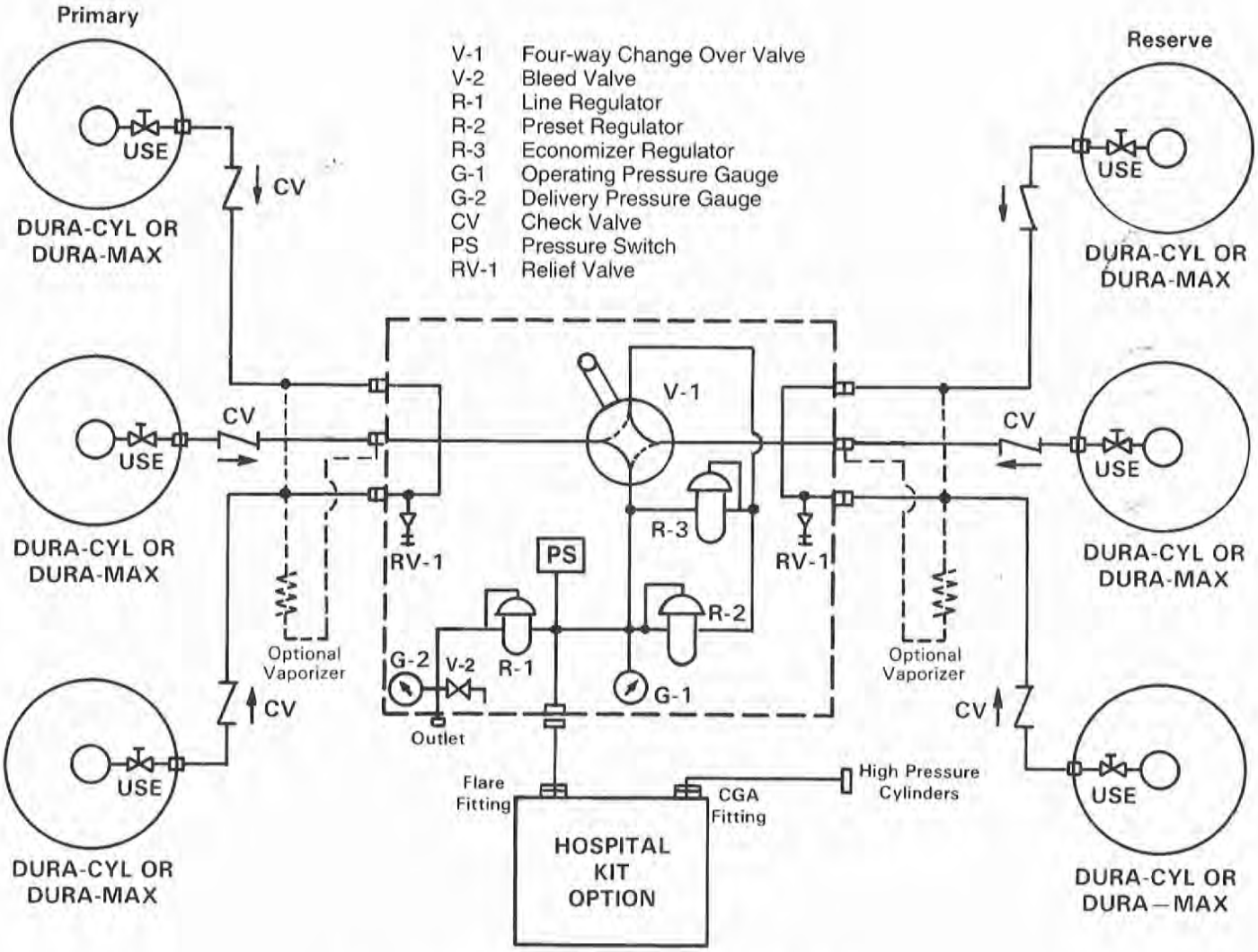

Figure 7-1. Flow Schematic, M-45 Manifold

CBM	Center Back Male
CGA	Compressed Gas Association
FPT	Female Pipe Thread
MPT	Male Pipe Thread
MVE	Minnesota Valley Engineering
NPT	National Pipe Thread
ODT	Outside Diameter-Tube
P/N	Part Number
PSI	Pounds per Square Inch
PSIG	Pounds per Square Inch at Gravity
SCFH	Standard Cubic Feet per Hour
SS	Stainless Steel
VCS	Vertical Customer Station

B-1. GENERAL

This appendix describes optional equipment and accessories available to support the Model M-45 Manifold. These items may be obtained from your local MVE distributor or from the factory.

B-2. HOSPITAL RESERVE KIT

The MVE Hospital Reserve Kit (figure B-1) is a device used to control an emergency supply of high pressure cylinders. It can be used in a backup system to a bulk customer supply system (such as the MVE Vertical Customer Station), or to portable liquid cylinders via the Model M-45 Manifold. The Hospital Reserve Kit will supply gas when the main (primary) supply source is depleted or has malfunctioned. Refer to the MVE Hospital Reserve Kit User's Manual for complete details on this option.

Figure B-1. MVE Hospital Reserve Kit

B-3. ADD-ON VAPORIZER PACKAGES

By connecting an MVE add-on vaporizer package to each side of the M-45 Manifold, higher delivery rates are attainable. A typical arrangement is shown on figure 1-2, "Manifold with Four Cylinders".

The particular add-on vaporizer package to be used is dependent on the type of service in which the manifold is being used; that is, depending on whether the manifold is being used in oxygen, inert gas, or CO_2/N_2O service, a different add-on vaporizer assembly is required. Refer to figures 6-3 through 6-5 in the Recommended Spare/Repair Parts List section of this manual for illustrations of the various add-on vaporizer packages available for use with the M-45 Manifold.

For further details on the add-on vaporizer packages, contact your local MVE distributor or the factory.

B-4. M-45 MOUNTING STAND

The M-45 Manifold Mounting Stand (figure B-2) provides a convenient mounting apparatus if wall mounting of the manifold is not desired or feasible. To order the mounting stand, specify MVE P/N 97-1294-9.

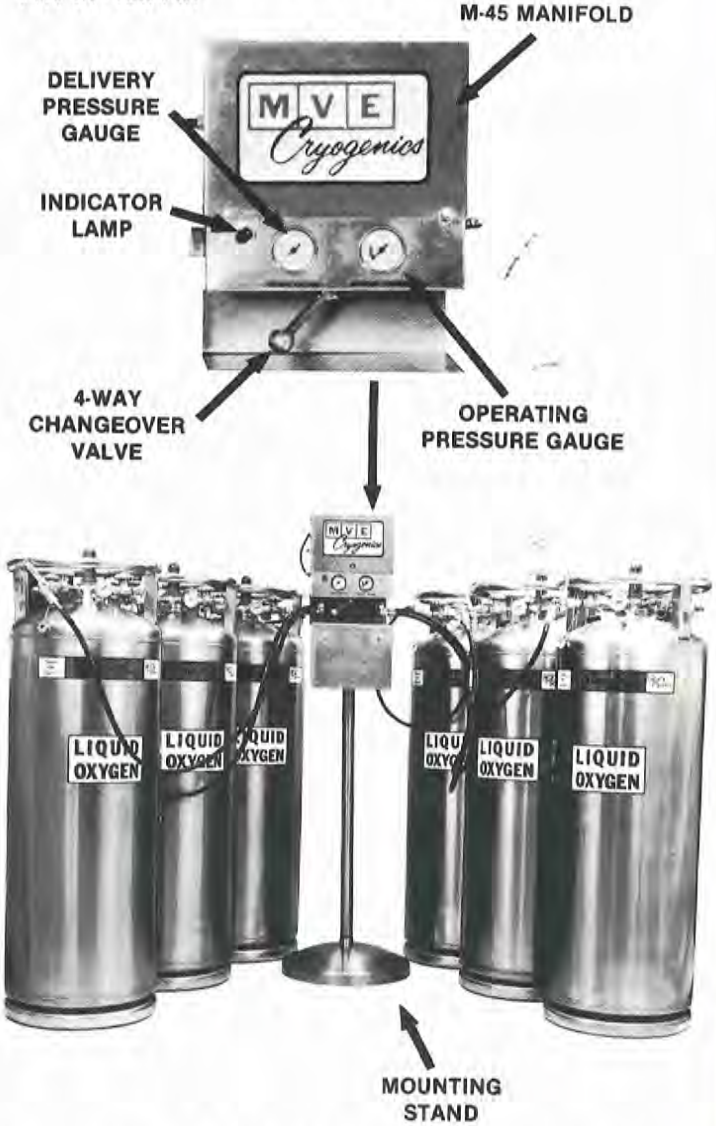

Figure B-2. MVE M-45 Manifold Mounting Stand

C-1. GENERAL

Cryogenic containers, stationary or portable, are from time to time subjected to assorted environmental conditions of an unforeseen nature. This safety bulletin is intended to call attention to the fact that whenever a cryogenic container is involved in any incident whereby the container or its safety devices are damaged, good safety practices must be followed. The same holds true whenever the integrity or function of a container is suspected of abnormal operation.

Good safety practices dictate that the contents of a damaged or suspect container be carefully emptied as soon as possible. Under no circumstances should a damaged container be left with product in it for an extended period of time. Further, a damaged or suspect container should not be refilled unless the unit has been repaired and recertified.

Incidents which require that such practices be followed include: highway accidents, immersion of a container in water, exposure to extreme heat or fire, and exposure to most adverse weather conditions (earthquakes, tornados, etc.). As a rule of thumb, whenever a container is suspected of abnormal operation, or has sustained actual damage, good safety practices must be followed.

In the event of known or suspected container vacuum problems (even if an extraordinary circumstance such as those noted above has not occurred), do not continue to use the unit. Continued use of a cryogenic container that has a vacuum problem can lead to embrittlement and cracking. Further, the carbon steel jacket could possibly rupture if the unit is exposed to inordinate stress conditions caused by an internal liquid leak.

Prior to reusing a damaged container, the unit must be tested, evaluated, and repaired as necessary. It is highly recommended that any damaged container be returned to MVE for repair and recertification.

The remainder of this safety bulletin addresses those adverse environments that may be encountered when a cryogenic container has been severely damaged. These are oxygen deficient atmospheres, oxygen enriched atmospheres, and exposure to inert gases.

C-2. OXYGEN DEFICIENT ATMOSPHERES

The normal oxygen content of the air is approximately 21%. Depletion of oxygen content in air, either by combustion or by displacement by inert gas, is a potential hazard and users should exercise suitable precautions.

One aspect of this possible hazard is the response of humans when exposed to an atmosphere containing only 8 to 12% oxygen. In this environment, unconsciousness can be immediate with virtually no warning.

When the oxygen content of air is reduced to about 15 or 16%, the flame of ordinary combustible materials, including those commonly used as fuel for heat or light, may be extinguished. Somewhat below this concentration, an individual breathing the air is mentally incapable of diagnosing the situation because the onset of symptoms such as sleepiness, fatigue, lassitude, loss of coordination, errors in judgment and confusion can be masked by a state of "euphoria", leaving the victim with a false sense of security and well-being.

Human exposure to atmospheres containing 12% or less oxygen leads to rapid unconsciousness. Unconsciousness can occur rapidly, rendering the user essentially helpless. This can occur if the condition is reached by an immediate change of environment, or through the gradual depletion of oxygen.

Most individuals working in or around oxygen deficient atmospheres rely on the "buddy system" for protection—obviously, the "buddy" is equally susceptible to asphyxiation if he or she enters the area to assist an unconscious partner unless equipped with a portable air supply. Best protection is obtained by equipping all individuals with a portable supply of respirable air. Life lines are acceptable only if the area is essentially free of obstructions and individuals can assist one another without constraint.

If an oxygen deficient atmosphere is suspected or known to exist:

1. Use the "buddy system". Use more than one "buddy" if necessary to move a fellow worker in an emergency.

2. Both the worker and the "buddy" should be equipped with self-contained or air-line breathing equipment.

C-3. OXYGEN ENRICHED ATMOSPHERES

An oxygen enriched atmosphere occurs whenever the normal oxygen content of the air is allowed to rise above 23%. While oxygen is nonflammable, ignition of combustible materials can occur more readily in an oxygen-rich atmosphere than in air; and combustion proceeds at a faster rate, although no more total heat is released.

It is important to locate an oxygen system in a well-ventilated location since oxygen-rich atmospheres may collect temporarily in confined areas during the functioning of a safety relief device or leakage from the system.

Oxygen system components, including but not limited to, containers, valves, valve seats, lubricants, fittings, gaskets and interconnecting equipment including hoses, shall have adequate compatibility with oxygen under the conditions of temperature and pressure to which the components may be exposed in the containment and use of oxygen. Easily ignitable materials shall be avoided unless they are parts of equipment or systems that are approved, listed, or proved suitable by tests or by past experience.

Compatibility involves both combustibility and ease of ignition. Materials that burn in air may burn violently in pure oxygen at normal pressure, and explosively in pressurized oxygen. In addition, many materials that do not burn in air may do so in pure oxygen, particularly when under pressure. Metals for containers and piping must be carefully selected, depending on service conditions. The various steels are acceptable for many applications, but some service conditions may call for other materials (usually copper or its alloys) because of their greater resistance to ignition and lower rate of combustion.

Similarly, materials that can be ignited in air have lower ignition energies in oxygen. Many such materials may be ignited by friction at a valve seat or stem packing, or by adiabatic compression produced when oxygen at high pressure is rapidly introduced into a system initially at low pressure.

C-4. NITROGEN AND ARGON

Nitrogen and argon (inert gases) are simple asphyxiants. Neither gas will support or sustain life and can produce immediate hazardous conditions through the displacement of oxygen. Under high pressure these gases may produce narcosis, even though an adequate oxygen supply sufficient for life is present.

Nitrogen and argon vapors in air dilute the concentration of oxygen necessary to support or sustain life. Inhalation of high concentrations of these gases can cause anoxia, resulting in dizziness, nausea, vomiting, or unconsciousness and possibly death. Individuals should be prohibited from entering areas where the oxygen content is less than 19% unless equipped with a self-contained breathing apparatus. Unconsciousness and death may occur with virtually no warning if the oxygen concentration is below approximately 8%. Contact with cold nitrogen or argon liquid can cause cryogenic (extreme low temperature) burns and freeze body tissue.

Persons suffering from lack of oxygen should be immediately moved to areas with normal atmospheres. **Self-contained breathing apparatus may be required to prevent asphyxiation of rescue workers.** Assisted respiration and supplemental oxygen should be given if the victim is not breathing. If cryogenic liquid or cold boil-off gas contacts the skin or eyes, the affected area should be promptly flooded or soaked with tepid water (105-115 °F; 41-46 °C). **Do not use hot water.** Cryogenic burns which result in blistering or deeper tissue freezing should be examined promptly by a physician.

Additional information on nitrogen and argon gas is available in CGA Pamphlet P-9. Write to the Compressed Gas Association, Inc., New York, NY 10110.

C-5. NITROUS OXIDE

At atmospheric pressure and temperature nitrous oxide is a colorless, practically odorless, tasteless, and non-toxic gas about 50 percent heavier than air.

Nitrous oxide is available in the compressed, liquefied form either in high pressure cylinders conforming with the Specification of the DOT in relatively low pressure bulk containers maintained at reduced temperatures.

Under normal conditions of storage and use, nitrous oxide is stable in both gas and liquid phases, and is non-corrosive.

Nitrous oxide is nonflammable. As with oxygen, ignition of combustible materials may occur more readily in a nitrous oxide enriched atmosphere than in air, with combustion proceeding at a faster rate. It is important to locate nitrous oxide systems in well-ventilated locations since nitrous oxide enriched atmospheres may collect temporarily in confined areas in the event of the functioning of a safety relief device or leakage from the system.

The nitrous oxide storage location shall be permanently placarded to indicate: "NITROUS OXIDE—NO SMOKING—NO OPEN FLAMES," or an equivalent warning.

It is recommended that personnel handling nitrous oxide also review CGA Pamphlet P-2, "Characteristics and Safe Handling of Medical Gases."

C-6. CARBON DIOXIDE

Physiological Effects: Carbon dioxide is present in the atmosphere at a concentration of 0.03 percent by volume and is a normal product of human and animal metabolism. Carbon dioxide acts upon vital functions in a number of ways, including respiratory stimulation, regulation of

blood circulation, and acidity of body fluids and the concentration of carbon dioxide in the air affects all of these. However, high concentrations may become dangerous upon extended exposure, due to increased breathing and heart rates and a change in body acidity. Extremely high concentrations of CO_2 displace oxygen and suffocation occurs, requiring artificial respiration.

The current OSHA standard for maximum allowable concentration of carbon dioxide in air is 0.5% for eight continuous hours of exposure.

Contact between the skin and dry ice, which is formed when liquid carbon dioxide is discharged directly into the atmosphere, can result in frostbite, and must be avoided.

Since CO_2 has a higher density than air, it may accumulate in low or confined areas. Adequate ventilation must be provided when CO_2 is discharged into the air.

Appropriate warning signs should be affixed outside of those areas where high concentrations of CO_2 gas may accumulate. One such sign is shown below:

CAUTION—CARBON DIOXIDE GAS
Ventilate before entering.
A high CO_2 gas concentration
may occur in this area
and may cause suffocation.

*** Extracted from *Safety Bulletin SB-2* from the Compressed Gas Association, Inc., New York, dated March, 1966; and from the *Nitrogen Material Safety Data Sheet*, published by Air Products and Chemicals, Inc., Allentown, PA 18105, dated 1 June, 1978.

MVE Cryogenics®

Minnesota Valley Engineering, Inc.

TWO APPLETREE SQUARE, SUITE 100, 8011 34TH AVENUE SOUTH
BLOOMINGTON, MN 55425-1636, TEL: 1-800-253-1769

FORM 2096D
P/N AAA 0435