AirSep®
A Chart Industries Company

CHART®

PSA Oxygen Concentrator System

Workhorse Series

Workhorse oxygen concentrators simplify the process of oxygen system selection and setup. Simply plug the unit in and turn on for high concentrated oxygen delivered quietly and reliably. Each Workhorse is the result of the same state-of-the-art engineering that produced the Advanced Technology Fractionators® (ATF).

The necessary components have been meticulously matched to optimize performance.

The Workhorse is intended to provide a turnkey solution when time or resources are not available to engineer a custom system. These PSA systems are economical and maintenance-free.

Features

- Fully integrated controls to ensure reliable oxygen production
- Rugged, environmentally tolerant design
- Compact and lightweight for maximum design flexibility
- Constant delivery pressure
- Optional oxygen concentration monitor
- Low operating cost
- Eliminates the need for an external product tank

Typical Applications

Manufacturing
- Jewelry/Brazing/Soldering

Artistic
- Glass Work/Blowing

Medical
- Hospital Systems

Environmental
- Ozone (Generator) Feed Gas
- Environmental Remediation
- Waste/Water Treatment

Additional
- Fish Farming
- Cosmetic

Specifications

	Workhorse-8	Workhorse-12	Workhorse-15
Product Characteristics			
Performance Data Product Flow[1] Oxygen Delivery Pressure	 4 LPM (8 SCFH) 9 psig (62 kPa)	 6 LPM (12 SCFH) 9 psig (62 kPa)	 7 LPM (15 SCFH) 7 psig (48 kPa)
Product Concentration (nominal)	90-95%	90-95%	90-95%
Product Dew Point	-100˚F (-73˚C)	-100˚F (-73˚C)	-100˚F (-73˚C)
Dimensions (W x D x H) (nominal)	14 x 18 x 14 in (36 x 46 x 36 cm)	14 x 18 x 14 in (36 x 46 x 36 cm)	14 x 18 x 22 in (36 x 46 x 55 cm)
Weight	43 lb (20 kg)	47 lb (21 kg)	49 lb (22 kg)
Physical Connections Product Gas Outlet	 1/8" FNPT	 1/8" FNPT	 1/8" FNPT
Ambient Operating Conditions	Locate the oxygen concentrator system in a well-ventilated area that is protected from weather elements and remains between 40°F (4°C) and 130°F (54°C) inside room or operating enclosure; 0°F (-18°C) and 140°F (60°C) in storage		
Control Power Requirements (Single Phase)	120 V ~ ±10%, 60 Hz or 208-240 V ~ ±10%, 60 Hz or 220-240 V ~ ±10%, 50 Hz		
Typical Power Consumption	Approximately 450 W	Approximately 450 W	Approximately 450 W

[1] LPM (Liters per minute) gas measured at 1 atmosphere and 21°C / SCF (Standard cubic foot) gas measured at 1 atmosphere and 70°F

The ATF Advantage

ATF oxygen modules incorporate proven pressure swing adsorption (PSA) principles into a unique patented design, which allows these systems to be compact, efficient, rugged, and lower in cost. The ATF module offers unparalleled design flexibility and enables applications where on-site/on-board oxygen generation was previously impractical.

A patented single rotary distribution valve built into the ATF module is continuously rotated at low speed by a small motor. The valve is maintenance free, self-cleaning, insensitive to contamination, and invulnerable to wear. It sequentially directs the flow of compressed air to a group of four sieve beds (adsorption), while at the same time another four beds are purged into the atmosphere through the valve (desorption). The remaining four of the twelve beds are interconnected through the valve to equalize pressure as the sieve beds sequentially transition between adsorption and desorption. The small amplitude pressure swings generated by the ATF's twelve sieve beds eliminate loud noise pulses, eliminate the need for a pressure regulator, and reduce compressor wear.

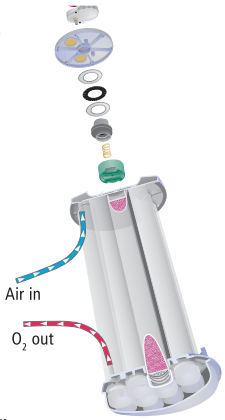

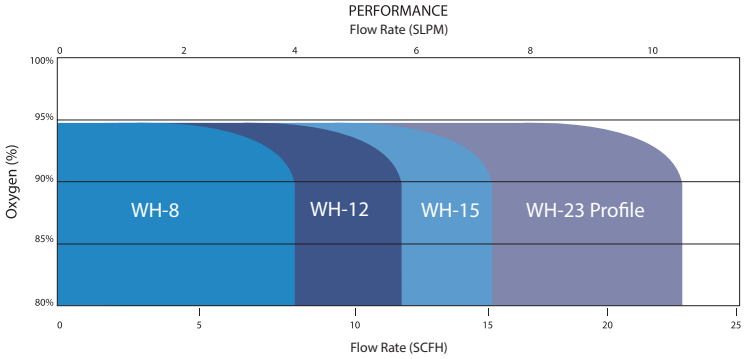

Workhorse-8 / Workhorse-12

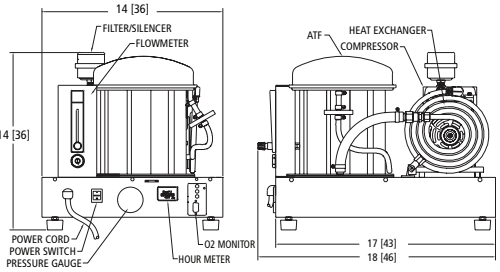

Workhorse-15

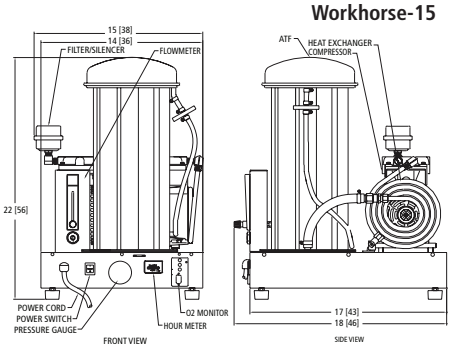

Note: Dimensions are in inches (cm). All dimensions are nominal.

Ordering Information

Model	Part Number	Description		
Workhorse-8	5665N-SEQ	120 V ~ ±10%, 60 Hz		
	5679N-SEQ	208-240 V ~ ±10%, 60 Hz		
	5673N-SEQ	220-240 V ~ ±10%, 50 Hz		
Workhorse-12	5685N-SEQ	120 V ~ ±10%, 60 Hz		
	5699N-SEQ	208-240 V ~ ±10%, 60 Hz		
	5693N-SEQ	220-240 V ~ ±10%, 50 Hz		
Workhorse-15	5719N-SEQ	120 V ~ ±10%, 60 Hz		
	5735N-SEQ	208-240 V ~ ±10%, 60 Hz		
	5727N-SEQ	220-240 V ~ ±10%, 50 Hz		
Accessories *(contact factory)* Example: (XXXXN-1-SEQ)	**Assembly**	**Pressure Gauge**	**Oxygen Concentration Monitor**	**Cover**
	No dash#			
	-1	✓		
	-2	✓		✓
	-3		✓	
	-4		✓	✓
	-5	✓	✓	
	-6	✓	✓	✓
	-7			✓

Shipping Information	Workhorse-8	Workhorse-12	Workhorse-15
Class	92.5	92.5	92.5
Commodity Classification Number	8421.39.8040	8421.39.8040	8421.39.8040
Dimensions (W x D x H)	18 x 23 x 18 in (46 x 59 x 46 cm)	18 x 23 x 18 in (46 x 59 x 46 cm)	18 x 23 x 26 in (46 x 59 x 66 cm)
Gross Weight	50 lb (23 kg)	54 lb (25 kg)	59 lb (27 kg)

Warranty: 1 Year Parts and Factory Labor*

* An unprotected or inadequately ventilated environment, or improper control power may cause damage to the oxygen generator not covered under warranty.

All performance ratings based on an ambient temperature up to 100°F (38°C), up to 1,000 feet elevation, and 80% relative humidity.

AirSep®
A Chart Industries Company
260 Creekside Drive
Buffalo, NY 14228-2075 U.S.A.
Tel: 800-482-2473 • (770) 721-7759 • Fax: (770) 721-7758
www.airsep.com • customerservice.usa@chartindustries.com

Copyright (C) 2014 Chart Industries
CAIRE Inc./Chart SeQual Technologies Inc./Chart Inc./AirSep Corp. reserves the right to discontinue its products, or change the prices, materials, equipment, quality, descriptions, specifications and/or processes to its products at any time without prior notice and with no further obligation or consequence.
All rights not expressly stated herein are reserved by us, as applicable.

ML-IND0028 D