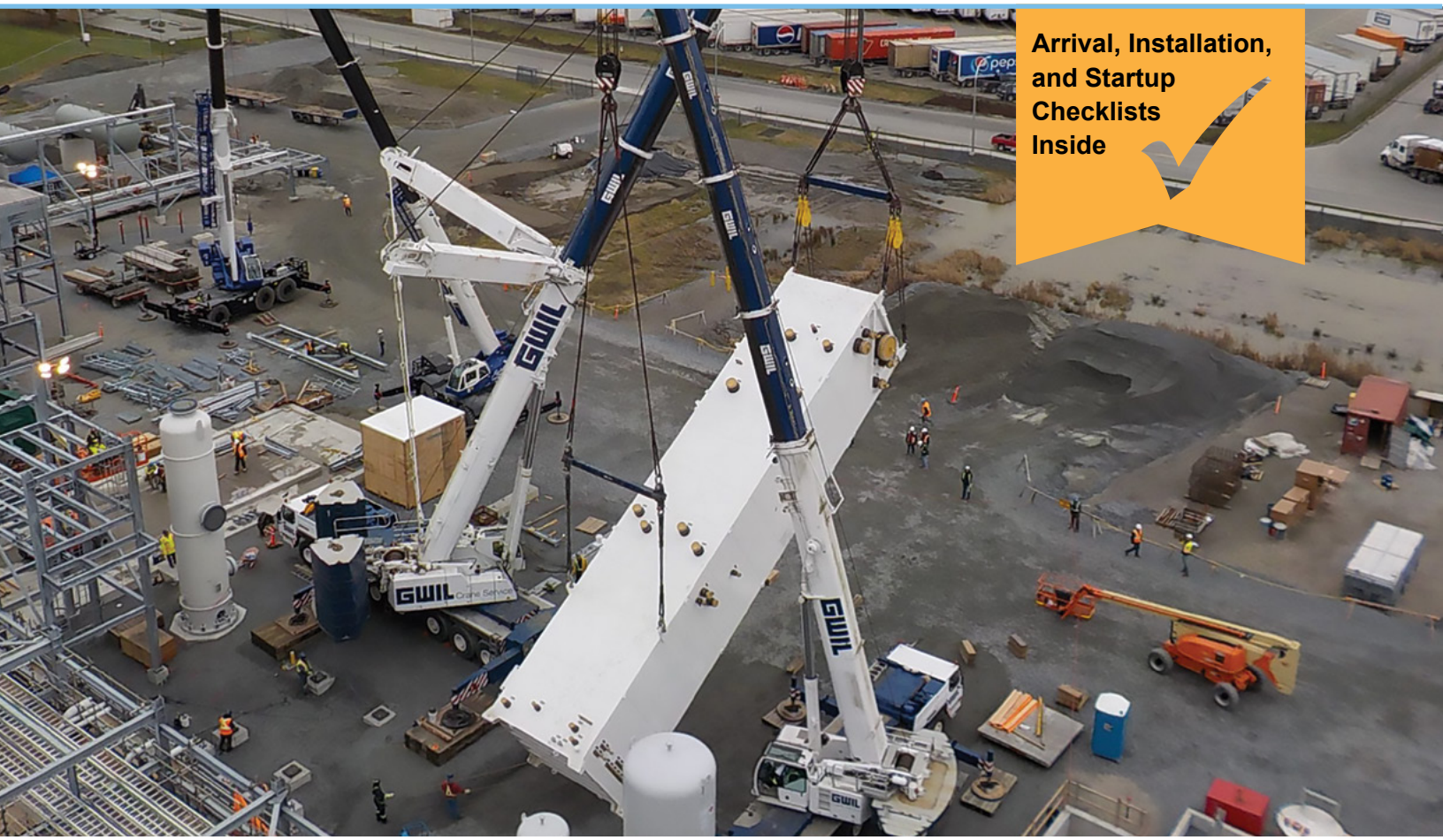

INSTALLATION, OPERATION, AND MAINTENANCE MANUAL

FOR CHART COLD BOX ASSEMBLIES

CHART®

Innovation. Experience. Performance.®

JULY 2017

ARRIVAL, INSTALLATION, AND STARTUP CHECKLISTS

The following checklists are for reference only, and are not intended to be comprehensive for all situations.

Plant Item Number:

Cold Box Arrival	**IOM Section**	**Checked By / Date**
1. Check for external damage	II. A.	
2. Verify cold box enclosure is air-tight (environmentally sealed)	II. A.	
3. Verify stream shipping pressure (typically 15 psig, if applicable)	II. A.	

Cold Box Storage		
1. Verify cold box enclosure is air-tight and stream shipping pressure is intact	II. B.	
2. Store in the as-shipped position with weight concentrated at the structural frame members	II. B.	

Cold Box Installation		
1. Install base plates and lift into position following unit specific lifting instructions	III. A.	
2. Ground the cold box casing	IV. C.	
3. Install nitrogen purge components, beginning with the breather valve and emergency vent	IV. F.	
4. Verify no water or debris trapped in field piping to be attached to cold box	V. E.	
5. Connect all nozzles to plant piping	IV. G.	
6. Remove all temporary shipping supports per unit specific drawings	IV. D.	
7. Remove all BAHX vent plugs (if applicable)	BAHX IOM	
8. Install ladders, handrails, and platforms (if applicable)	I. A. 17.	
9. Perform field piping system leak / proof test using dry gas (-40 °F dew point or lower)	V. D.	
10. Install perlite insulation	IV. E.	

Cold Box Initial Startup		
1. Verify overpressure protection for all streams	V. D.	
2. Verify filters installed for all applicable streams	BAHX IOM	
3. Verify no water trapped in or upstream of cold box and purge all drain lines	V. E.	
4. Perform dehumidification purge of cold box enclosure	V. A. 1.	
5. Commence continuous purge	V. A. 2.	
6. Bring to operating conditions per process equipment guidelines		
7. Top off perlite insultation after 1 month	IV. E.	

Installation, Commissioning & Startup Services
CHART LIFECYCLE IS HERE TO HELP!

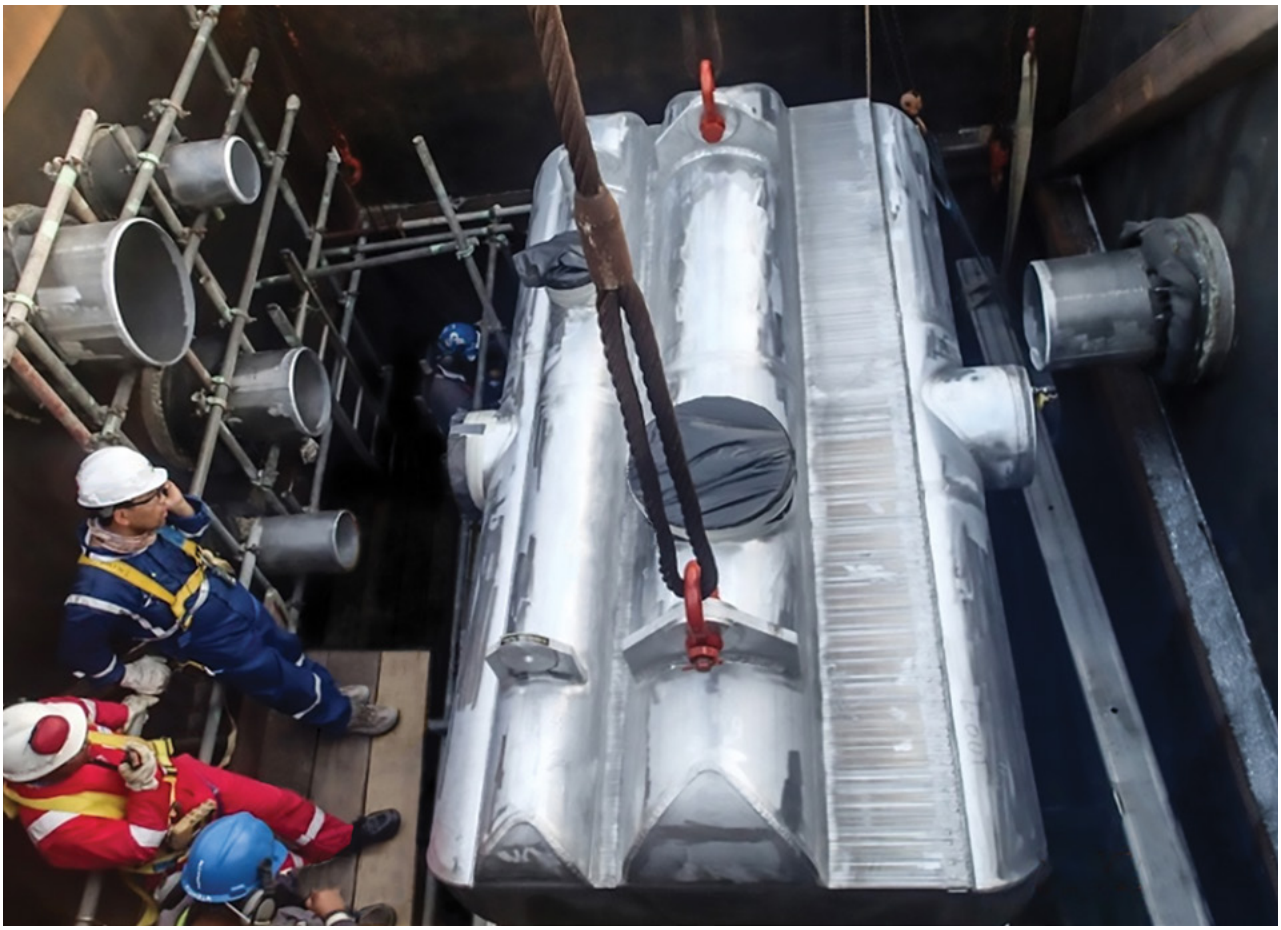

Chart Lifecycle has qualified Field Service Engineering teams to provide full installation, commissioning and startup related services. Chart highly recommends these OEM trained services to ensure a successful equipment startup. Chart also provides best practices for the maintenance and management of Chart proprietary equipment for optimized performance and lifespan. Chart Lifecycle, Inc., is also your 24/7 single point of contact for commissioning and startup services, spares, repairs, warranties, technical expertise, project development, field services, and training. Other services include:

- Annual service agreements
- Extended warranties
- Predictive maintenance analysis
- Customized operating solutions and best practices
- Performance improvement consulting services

Tel: 1-844-GTLS-911 (1-844-485-7911) – 24/7 hotline

E-mail: info@ChartLifecycle.com

www.ChartLifecycle.com

CHART®

Chart Lifecycle, Inc.

FIGURE I

Basic Components of a Chart Cold Box

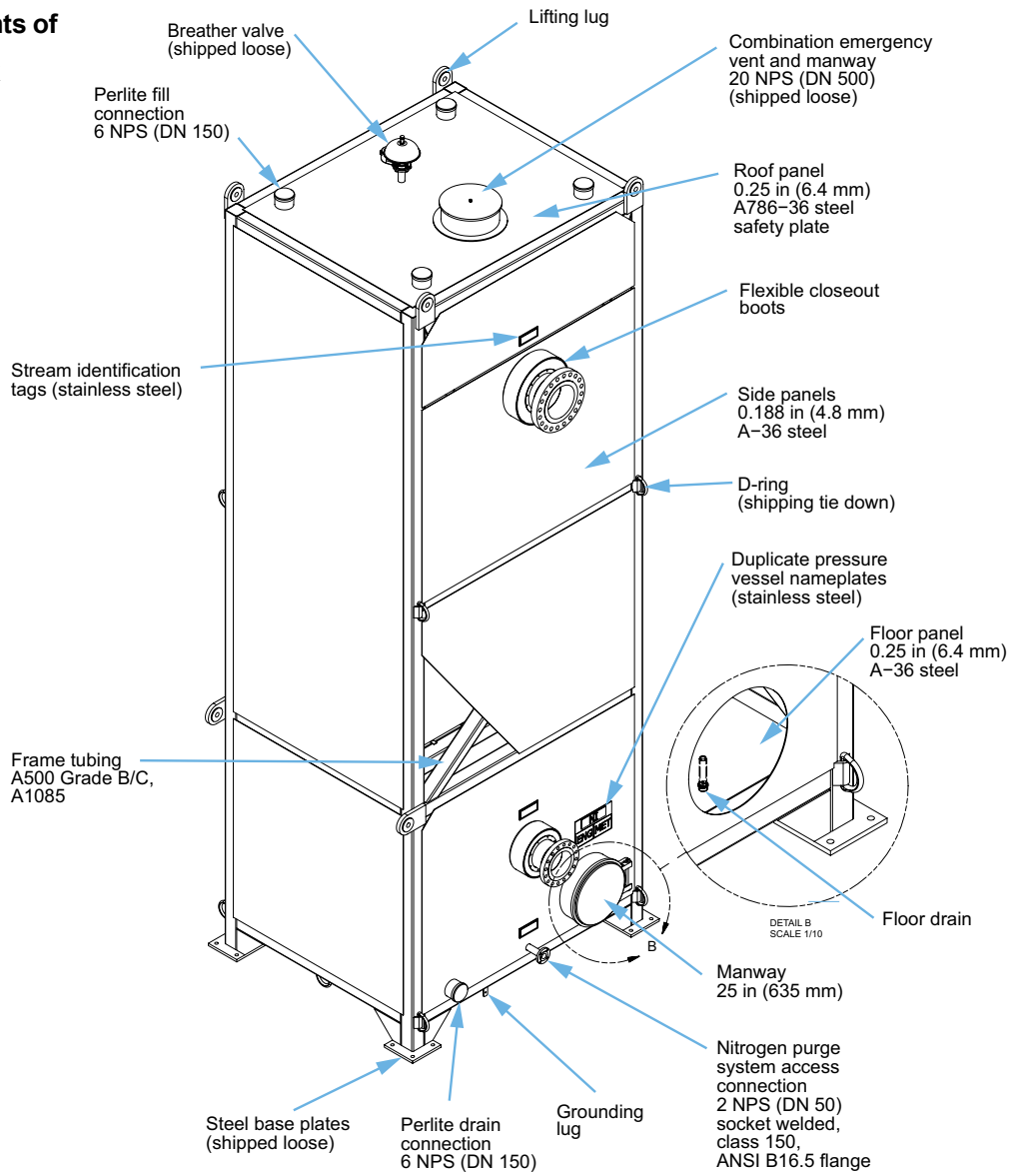

Chart Energy & Chemicals (E&C) designs and manufactures process equipment utilized primarily for cryogenic applications such as industrial gas, hydrocarbon, LNG, petrochemical (ethylene), and other refinery applications. Chart E&C's engineering staff is capable of assisting customers with integrating our equipment into the plant/process design.

Chart incorporates the former Altec and Marston BAHX brands and consequently all rights to engineering and equipment produced by these companies.

TABLE OF CONTENTS

TABLE OF FIGURES

FOREWORD

This manual includes Chart's instructions, practices, and procedures regarding installation, operation, and maintenance of cold boxes. Please contact Chart Lifecycle for assistance in the installation, commissioning, and startup services related to this equipment. Chart highly recommends these OEM trained services to assure a successful equipment startup.

This manual is based on extensive experience, including more than 60 years in the design and manufacture of process equipment for low temperature applications, including air separation and liquefaction, natural gas processing and liquefaction, helium liquefaction, and hydrogen, ethylene, and other light hydrocarbon product recoveries.

THROUGHOUT THIS MANUAL, SAFETY ITEMS ARE HIGHLIGHTED IN CAPITAL LETTERS AND LABELED WITH THE CAUTION MARK SHOWN HERE.

This manual is updated periodically. Before attempting any procedure you should verify with Chart that you are using the current version.

This manual cannot cover all possible variations in equipment design or provide answers to all specific installation, operation, and maintenance questions that may arise. If for any reason, any variations or questions arise that are not addressed in this manual, or any of these instructions, practices, and procedures cannot be followed, the contractor or owner must contact Chart for further information, interpretation, and guidance. Failure to follow the instructions, practices, and procedures may result in serious bodily injury or death, property damage, irreparable damage to the Chart equipment, and the voiding of any warranties applicable to the equipment.

When these instructions, practices, and procedures are followed, extended and reliable service from the equipment can be expected.

THESE ITEMS SHOULD BE READ WITH EXTREME CARE AND THOROUGHLY UNDERSTOOD BEFORE COMMENCING ANY INSTALLATION, OPERATION, OR MAINTENANCE OF CHART EQUIPMENT. FAILURE TO PROPERLY FOLLOW INSTRUCTIONS SO DESIGNATED COULD RESULT IN RUPTURES OR EXPLOSIONS OR OTHER DANGEROUS SITUATIONS WHICH MAY RESULT IN SERIOUS BODILY INJURY OR DEATH AND PROPERTY DAMAGE AS WELL AS IRREPARABLE DAMAGE TO THE CHART EQUIPMENT AND THE VOIDING OF ANY WARRANTIES APPLICABLE TO THE EQUIPMENT.

DO NOT MODIFY THE EQUIPMENT OR DEVIATE FROM THE INSTRUCTIONS, PRACTICES, AND PROCEDURES IN THIS MANUAL.

THE CONTRACTOR OR OWNER INSTALLING CHART EQUIPMENT MUST COMPLY WITH THESE INSTRUCTIONS, PRACTICES, AND PROCEDURES ALONG WITH ANY LIFTING AND HANDLING AND OTHER INSTRUCTIONS, PRACTICES, AND PROCEDURES PROVIDED WITH INDIVIDUAL UNITS.

I. INTRODUCTION

A. Cold Box Basic Components

B. Codes and Materials of Construction

C. Nitrogen Purge System

D. Allowable Pipe Loads

E. Handrails, Ladders, Platforms

F. Standard Factory Testing

G. Painting

H. Loose Parts

I. Valves and Instrumentation

I. A. COLD BOX BASIC COMPONENTS

I. A. Cold Box Basic Components

A cold box consists of a carbon steel casing, usually rectangular in shape, that supports and houses heat exchangers, vessels, piping, other related cryogenic equipment, and insulation material in an inert atmosphere.

I. A. 1. Frame Tubing

The main exterior framing typically consists of vertical carbon steel columns connected by horizontal members at various elevations as necessary for support of internal equipment.

I. A. 2. Internal Support Members

Main support members for vessels operating below -20 °F (-28.9 °C) are fabricated from stainless steel or low temperature carbon steel. A minimum of 0.50 in (12.7 mm) of phenolic canvas base material, Micarta®, is placed between the support angles of internal equipment and their support beams.

The phenolic canvas serves two purposes. First, it provides a smooth surface upon which the supports can slide due to thermal contraction of the equipment. Second, it impedes heat transfer into the support members to avoid frost spots on the exterior of the cold box.

I. A. 3. Side Panels

The cold box is enclosed with 0.188 in (4.8 mm) carbon steel side panels to create an air tight enclosure.

I. A. 4. Roof and Floor Panels

Floor and roof panels are 0.25 in (6.4 mm) carbon steel plate. For safety purposes, all roof panels are made of raised pattern plate.

I. A. 5. Flexible Closeout Boots

The process connections penetrate through the cold box panels via flexible closeout boots. The closeouts are insulated and create an air tight seal while accommodating the natural piping movement that occurs when the equipment is operated (see Figure II).

I. A. 6. Lifting Lugs

The cold box includes lifting lugs for horizontal lifting during transportation to site and vertical lifting during the erection sequence at site.

I. A. 7. D-Rings

D-rings are provided as shipping tie downs during transportation.

I. A. 8. Base Plates

The base plates are fabricated by Chart and shipped loose. See section IV. A. for further details.

FIGURE II

Flexible Closeout Boot

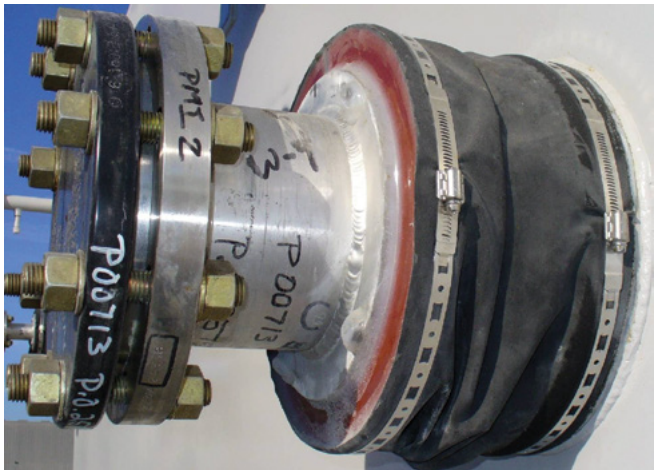

I. A. COLD BOX BASIC COMPONENTS

I. A. 9. Combination Emergency Vent and Manway

The top of the cold box is fitted with an emergency relief hatch to prevent over-pressurization of the cold box structure in case of an internal equipment leak. The vent is set to open at 4 inH_2O (10 mbarg). The relief hatch serves a dual purpose as a 20 in (508 mm) manway on the top of the cold box. It can also be used as a perlite fill (see Figure III).

FIGURE III

Breather Valve and Emergency Vent Hatch

FIGURE IV

Breather Valve

I. A. 10. Breather Valve

The top of the cold box is fitted with a breather valve with a 3 inH_2O (7.5 mbarg) pressure setting and a 2.2 inH_2O (5.4 mbarg) vacuum setting (see Figure IV). To prevent damage during shipping, the breather valve ships loose and is to be installed at site.

I. A. 11. Manway

A 25 in (635 mm) manway is typically installed on the cold box near the floor (see Figure V).

I. A. 12 Floor Drain

A floor drain is typically located near the manway for draining liquid that has accumulated inside the cold box. The floor drain should be capped when not in use.

I. A. 13. Perlite Fill Connections

The cold box is typically fitted with 6 NPS (DN 150) perlite fill connections on the roof. Fill connections are threaded and furnished with caps.

FIGURE V

Manway

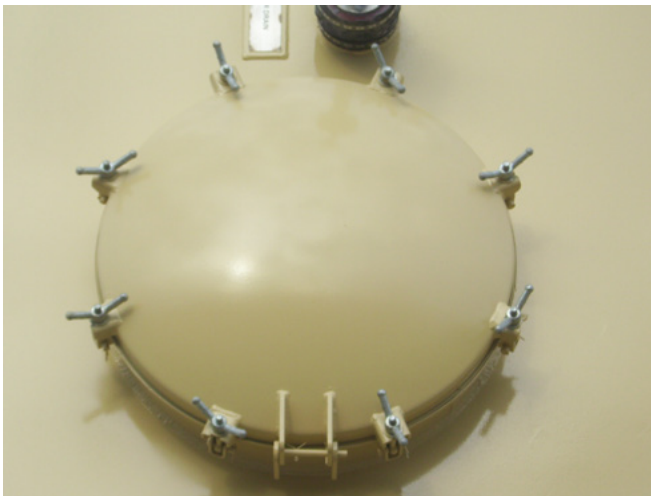

I. A. COLD BOX BASIC COMPONENTS

I. A. 14. Perlite Drain Connections

The cold box is typically fitted with 6 NPS (DN 150) perlite drains on the side of the cold box flush with the floor. Drain connections are threaded and fitted with caps.

I. A. 15. Stream Identification Tags

Each process connection is clearly labeled with a stainless steel stream identification tag (see Figure VI).

I. A. 16. Duplicate Pressure Vessel Nameplates

For each code vessel inside the cold box, a duplicate stainless steel nameplate is attached to the outside of the cold box (see Figure VII).

I. A. 17. Optional Equipment

Upon request, Chart can provide other optional equipment to the cold box including, but not limited to the following:

- Transition joints (bimetallic couplings)
- Perlite drain valves
- Handrails
- External ladders and platforms

FIGURE VI

Stream Identification Tags

FIGURE VII

Duplicate Pressure Vessel Nameplates

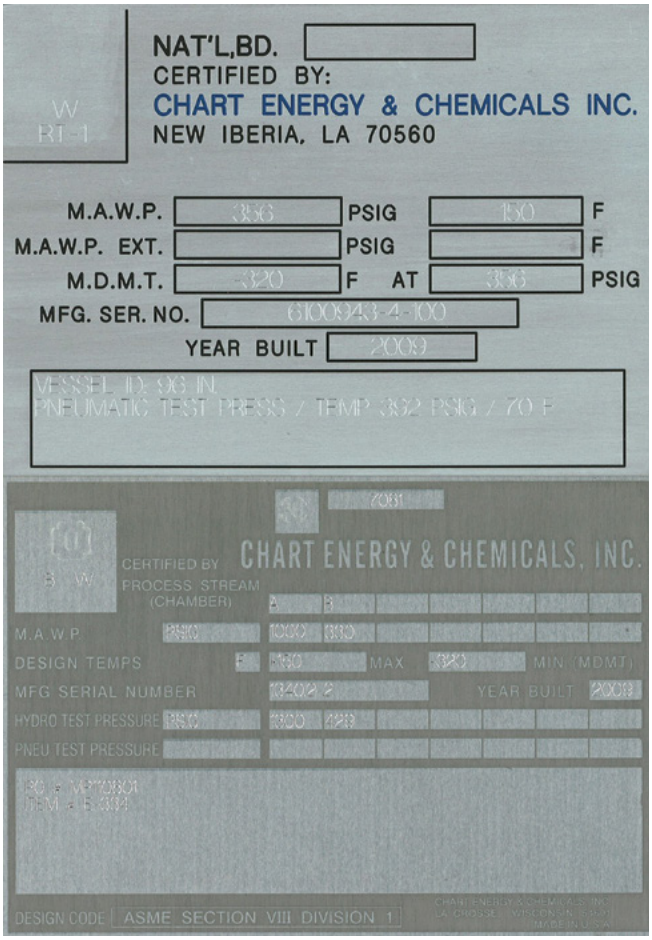

I. B. CODES AND MATERIALS OF CONSTRUCTION

I. B. Codes and Materials of Construction

The following codes and standards are routinely used by Chart.

ASTM - American Society for Testing and Materials
AISC - American Institute of Steel Construction
AWS - American Welding Society
ASME - American Society of Mechanical Engineers
ANSI - American National Standards Institute
ASCE - American Society of Civil Engineers
SSPC - Steel Structures Painting Council
PIP - Process Industry Practices

All material is new and certified. Cold box structure and panels are certified to the following ASTM specifications.

COMPONENT	ASTM Specification
Carbon Steel Structural Shapes	A36
Carbon Steel Structural Tubing	A500 Grade B/C, A1085
Stainless Steel Structural Tubing	A554 Grade MT304
Raised Pattern Safety Plate (Roof)	A786
Floor Plate	A36
Stainless Steel Plate	A240-304
Low Temperature Carbon Steel Plate	A516 Grade 70
Stainless Steel Bolts (Structural)	A320 Grade B8
Side Panels	A36

I. C. NITROGEN PURGE SYSTEM

I. C. Nitrogen Purge System

A pipe is installed on the inside perimeter of the box floor to act as a nitrogen purge header. The pipe has holes in it to distribute nitrogen throughout the box, and is connected to a flange outside of the cold box. A continuous nitrogen supply shall be run through the box during operation. The fiberglass wrapping is used to prevent perlite insulation from entering into the nitrogen distribution holes in the bottom of the pipe, and should not be removed (see Figure VIII).

FIGURE VIII

Nitrogen Purge with Fiberglass Wrapping

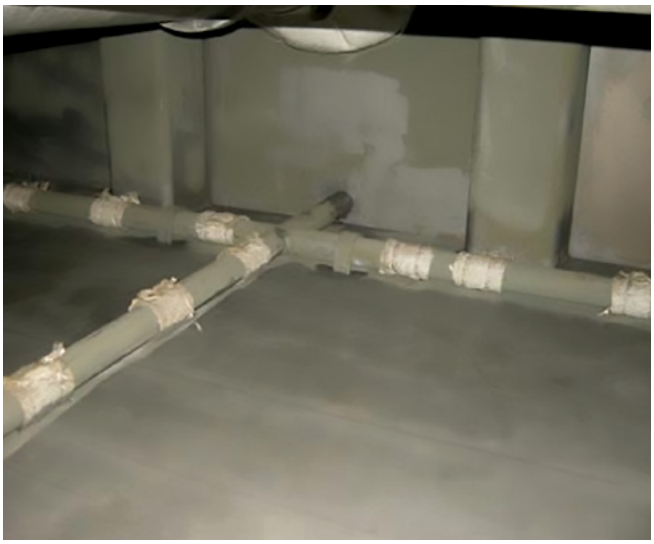

I. D. ALLOWABLE PIPE LOADS

I. D. Allowable Pipe Loads

A table indicating maximum allowable pipe loads on brazed aluminum heat exchangers is provided with the design package. This table indicates the maximum allowable bending moment and axial load that may be applied at each nozzle to header joint on the exchanger. These maximum loads are not to be applied simultaneously. Instructions for summing applied moments and forces are supplied with the table.

Pipe loads on vessels should be analyzed using standard industry practices, such as WRC-107.

It is the customer's responsibility to provide sufficient piping flexibility or piping supports in the customer piping to ensure that the combined loads on each nozzle on the internal equipment are within the allowable limits specified.

When a unit is supplied with transition joints, the applied loads on the transition joints must be checked against the allowable loads recommended by the joint manufacturer.

FAILURE TO PROVIDE SUFFICIENT PIPE FLEXIBILITY OR PIPING SUPPORTS COULD RESULT IN COMBINED PRESSURE AND EXTERNAL PIPE LOADS BEING APPLIED THAT EXCEED THE ALLOWABLE LOADS AND CAUSE FAILURE OF THE UNIT OR TRANSITION JOINT.

I. E. HANDRAILS, LADDERS, PLATFORMS

I. E. Handrails, Ladders, Platforms

Handrails, ladders, or platforms are not provided by Chart unless specified in the purchase order. When provided by Chart, these items are generally trial fit at Chart's fabrication facility and then shipped loose (see Figure IX).

FIGURE IX

Installed Ladder, Handrails, and Platform

I. F. STANDARD FACTORY TESTING, G. PAINTING, H. LOOSE PARTS

I. F. Standard Factory Testing

I. F. 1. Cold Box Piping Test

After completion of welding of all pipe spools to equipment within the cold box, the piping is pneumatic tested at Chart's fabrication facility. This test is performed at 1.1 times the design pressure of each stream per ASME B31.3. The pressure is then dropped to the design pressure and a soap film leak test is performed on all piping welds.

I. F. 2. Standard Cold Box Casing Test

To assure a sturdy leak-tight construction, the cold box is proof tested with air at 4 inH_2O (10 mbarg) at the Chart fabrication facility. No obvious leakage is allowed. The box is then leak tested with air at 3 inH_2O (7.5 mbarg), using a standard soap test procedure and pressure decay test.

I. G. Painting

Chart has extensive experience coating the external carbon steel surfaces of cold boxes using a variety of paint systems. The purchaser has the option to specify the paint system to be used on a particular project. The inside of the cold box is a dry, air tight environment under nitrogen purge, therefore painting on the inside is not required but can be accommodated upon request. Refer to the Chart generated project specific paint specification for detailed information on the applied coating system.

I. H. Loose Parts

In order to prevent damage during shipping, several parts will ship loose with the cold box. These items include the breather valve, emergency vent hatch, any ladders or handrails, pressure transmitters, control valve actuators, and base plates. These parts must be assembled on site.

I. I. VALVES AND INSTRUMENTATION

I. I. Valves and Instrumentation

I. I. 1. Control Valves

Chart may provide control valves as part of a cold box assembly. Typically, extended bonnet control valves are used, which protrude through the cold box wall as depicted in Figure X. This arrangement has no bolted connection inside the cold box. The actuator and positioner are attached to the end of the extension outside of the cold box. This allows all wiring and pneumatic lines to be connected and all valve maintenance to be performed outside of the cold box.

The customer is responsible for bringing wires and pneumatic lines up to the control valve positioner. Because the purpose of a control valve is to drop the pressure in a line, the valves are typically not the same size as the main pipeline. The valves will have reducers on their inlets and outlets, and the inlet pipeline size may be different than the outlet pipeline size. The valve bonnet penetrates through the cold box wall and is closed out using a flexible boot as depicted in Figure XI.

I. I. 2. Temperature Elements (RTD's and Thermocouples)

Chart may provide integral temperature elements installed into the equipment inside a cold box. The temperature elements will terminate outside of the cold box inside a junction box. Inside the cold box, temperature elements are contained within air tight shielding. The preferred type is flexible shielding per Figure XIII. The wire is routed through Unistrut®, as shown in Figure XIV, to protect it and guide it down to the wire penetration locations.

There are different ways to mount temperature elements to the equipment. A thermowell installed directly into a pipe is shown on the left side of Figure XII. A thermowell installed directly into a brazed aluminum heat exchanger layer is shown on the right side of Figure XII. Skin type temperature elements are also available.

FIGURE X

Control Valve Setup

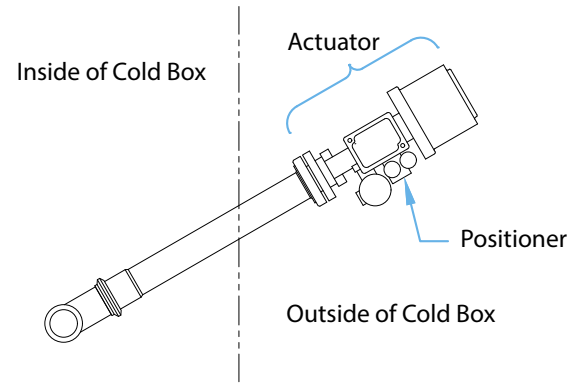

FIGURE XI

Control Valve Close-out

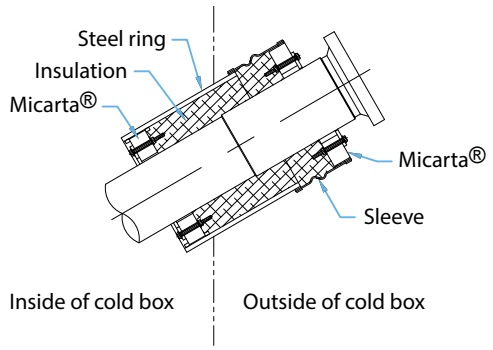

FIGURE XII

In-pipe and In-layer Thermowells

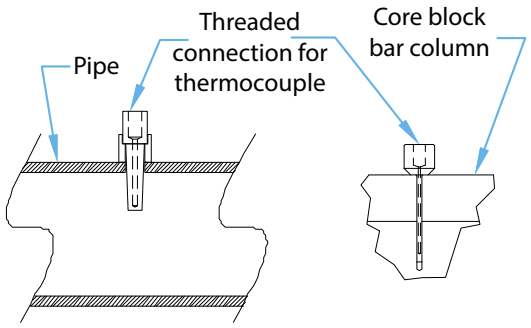

I. I. VALVES AND INSTRUMENTATION

I. I. 3. Junction Box

Chart may provide a junction box on the outside of the cold box in which all temperature element lines terminate. This simplifies the process of wiring plant instrumentation and control systems related to the cold box since the wiring can conveniently be connected to the terminals in the junction box. When supplied, Chart typically uses a NEMA 4X rated junction box.

I. I. 4. Pressure Tubing

Tubing for pressure measurement is normally 0.50 in (12.7 mm) diameter and routed directly from the process line to a needle valve and optional transmitter on the outside of the box. It is desirable to vaporize any fluid before it reaches the measuring device. To achieve this, the tubing is routed with a gentle rise from the process line to the box wall and then routed near the box wall until it reaches the measuring device (see Figure XV).

I. I. 5. Flow Meters

When flow meters are required to measure process flow inside the cold box, Chart provides venturi or orifice type flow meters. Where it is desired to measure the flow into the nitrogen purge system, a rotameter type flow meter is recommended.

I. I. 6. Gas Detector

When cold boxes are used for hydrocarbon service, Chart recommends the installation of a gas detector onto the breather valve to detect any process leaks inside the cold box. A threaded tap is typically supplied on the breather vent nozzle for this purpose.

FIGURE XIII

Temperature Element Shielding

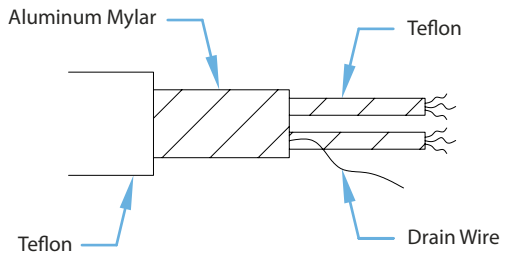

FIGURE XIV

Unistrut® for Wiring

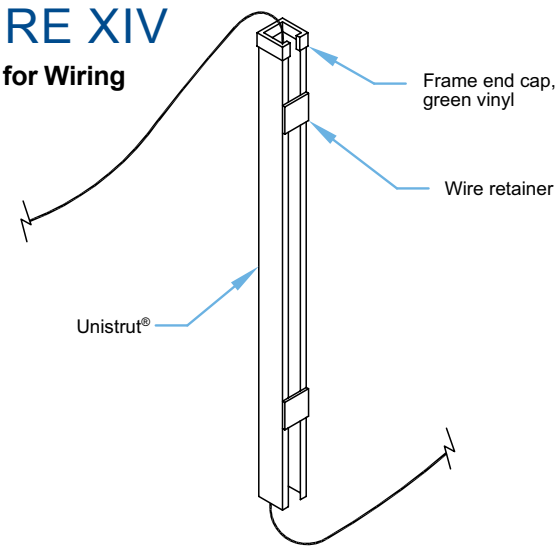

FIGURE XV

Pressure Tubing

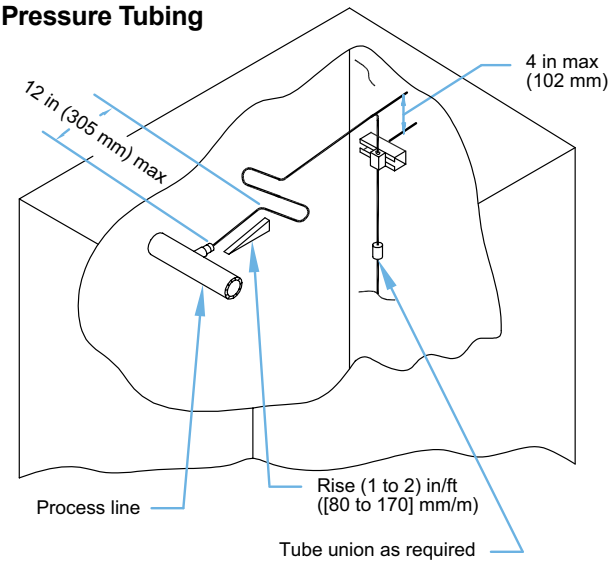

II. ARRIVAL INSPECTION AND STORAGE

A. First Arrival

B. Storage

II. A. FIRST ARRIVAL

II. A. First Arrival

Upon arrival the cold box should be inspected for shipping damage and contamination. Closely examine the cold box for external damage.

Shipping blinds do not need to be removed for first arrival inspection. Do not remove the shipping blinds until final installation to prevent ingress of moisture and other contaminants.

THE COLD BOX IS A CONFINED SPACE. PROPER SAFETY PROCEDURES AND PRECAUTIONS FOR CONFINED SPACE ENTRY MUST BE PRACTICED. FAILURE TO FOLLOW CONFINED SPACE ENTRY PRECAUTIONS COULD RESULT IN SERIOUS PERSONAL INJURY OR DEATH.

For internal equipment shipped pressurized with dry air or nitrogen, each stream is provided with a valve and coupling to which a pressure gauge can be mounted (see Figure XVI). A positive pressure should be indicated on the gauge when the valves are opened. If a gauge does not indicate a positive pressure and the valve and coupling connections have been checked for leakage, the stream should be repressurized with dry air or nitrogen to the lesser of 15 psig (1 barg) or one-third the stream's design pressure. If a leak in the internal equipment, shipping damage, or internal shipping contamination is confirmed, consult Chart for further direction.

FIGURE XVI

Shipping Valve

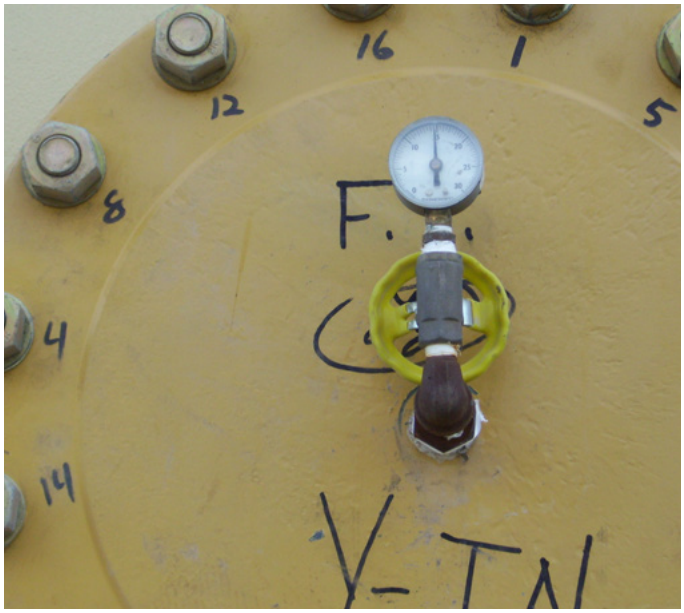

II. B. STORAGE

II. B. Storage

Prior to storage, verify cold box interior is sealed air-tight. Inspect flexible closeout boots, flanges, instrument ports, and other covered or sealed wall openings for damage and proper sealing. Verify the stream shipping pressure of the internal process equipment by opening the shipping valves (see Figure XVI). Close the shipping valves afterwards to prevent loss of stream shipping pressure in the event the pressure gauge is damaged.

Store the cold box in the as-shipped position, with the weight concentrated at the structural frame members in accordance with the construction drawing. Take precautions to avoid water, dirt, and other contaminants from entering the cold box during storage.

III. LIFTING AND HANDLING

A. Lifting and Handling

III. A. LIFTING AND HANDLING

III. A. Lifting and Handling

Lifting and handling instructions are provided with all units. All handling must be in accordance with the supplied instructions.

Contact Chart prior to moving the unit if the handling instructions are missing or additional information is required.

Confirm the weight, dimensions, center of gravity, and lift connection details of the unit. Select the appropriate hoisting machines, spreader beams, slings, shackles, and other material handling tools in consideration of the height, weight, and the angle and direction of the hoisting. Carefully inspect slings, cabling, and shackles for wear. Care should be taken to avoid impacts to the unit. Rough or improper handling can cause damage to the internal construction of the cold box.

FAILURE TO HANDLE THE COLD BOX PROPERLY DURING MOVEMENT AND ERECTION COULD RESULT IN THE COLD BOX BEING DROPPED OR OTHER ACCIDENTS, WHICH COULD CAUSE SERIOUS PERSONAL INJURY OR DEATH AS WELL AS IRREPARABLE DAMAGE TO THE UNIT.

FIGURE XVII

Cold Box Lift onto Shipping Barge

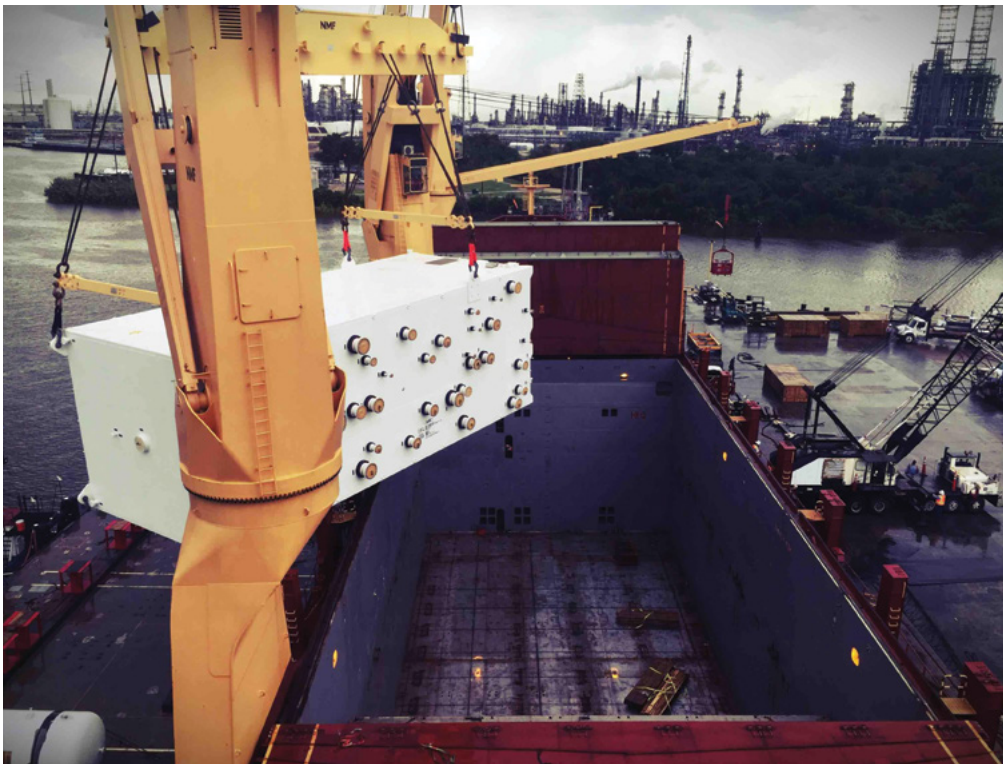

III. A. LIFTING AND HANDLING

FIGURE XVIII

Typical Lifting Drawing

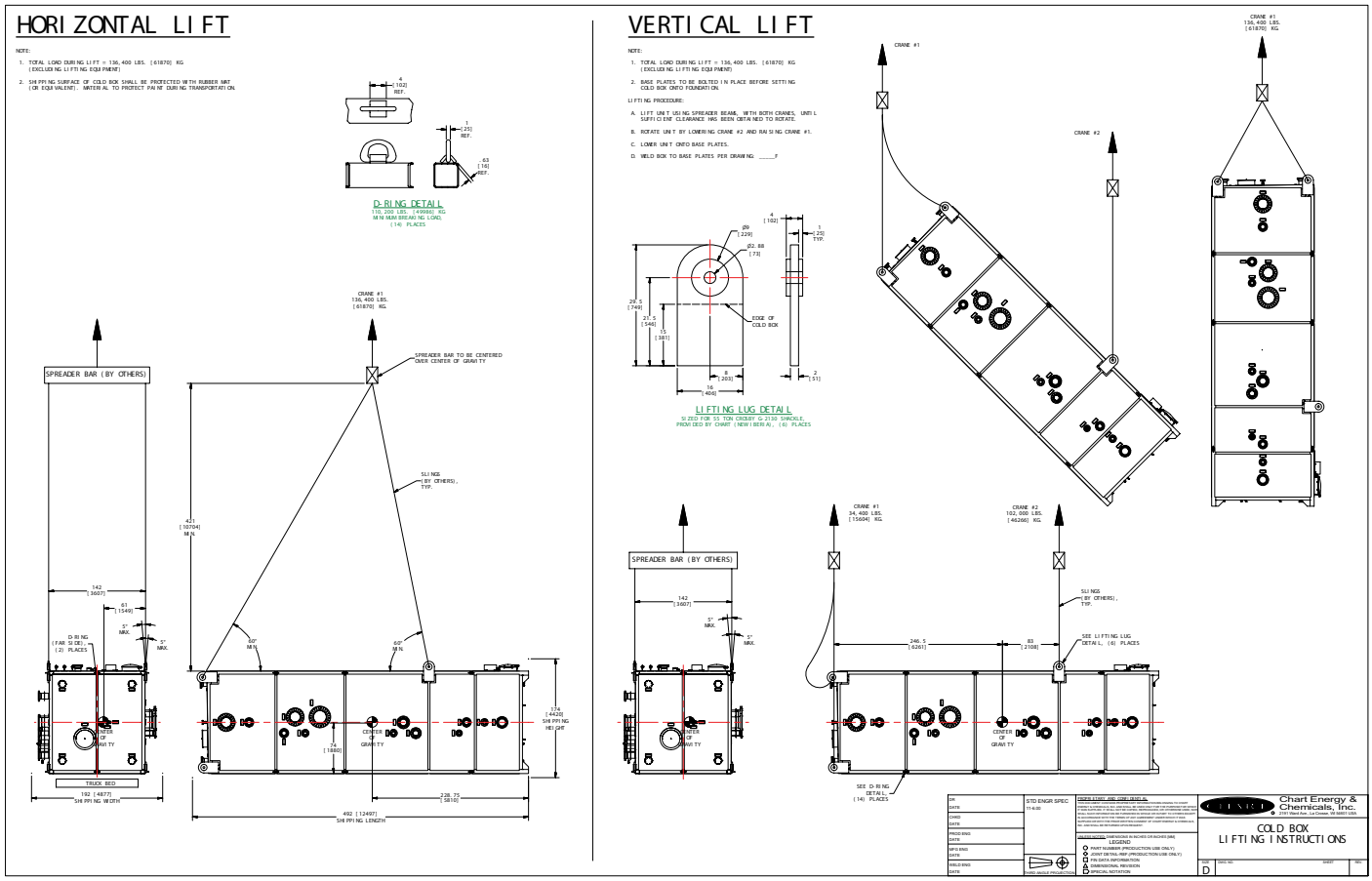

IV. INSTALLATION

A. Base Plate Installation

B. General Setting Recommendations

C. Grounding

D. Temporary Bracing

E. Perlite Insulation

F. Nitrogen Purge System

G. Flanged Connections

IV. A. BASE PLATE INSTALLATION, B. GENERAL SETTING RECOMMENDATIONS, C. GROUNDING

IV. A. Base Plate Installation

The cold box will generally be mounted to the foundation by square base plates at the end of each column. Chart's standard practice is to supply base plates as shipped loose items with the cold box. The recommended work flow is as follows.

- Set base plates on anchor bolts.
- Shim under base plates to assure levelness.
- Secure base plate to anchor bolts.
- Lift and set cold box on base plates.
- Loosen nuts on base plates.
- Weld base plates to corner posts and intermediate columns.
- Tighten nuts on base plates.
- Fill in and seal gaps underneath base plates with grout.

This method minimizes potential damage to the anchor bolts and ensures that any unfavorable tolerances will not cause difficulty fitting the cold box onto the anchor bolts.

IV. B. General Setting Recommendations

Chart provides detailed lifting drawings for use when transporting, moving, and erecting the cold box. Spreader beam requirements are shown on the lifting drawings and must be used to prevent over stressing and potentially failing the lifting components. The scope of supply for the lifting equipment is identified on the lifting drawings as well.

FAILURE TO USE A SPREADER BEAM DURING LIFTING WHEN A SPREADER BEAM IS SPECIFIED ON THE LIFTING DRAWINGS CAN DAMAGE THE LIFTING COMPONENTS AND MAY RESULT IN SERIOUS BODILY INJURY OR DEATH AND PROPERTY DAMAGE AS WELL AS IRREPARABLE DAMAGE TO THE CHART EQUIPMENT AND THE VOIDING OF ANY WARRANTIES APPLICABLE TO THE EQUIPMENT.

IV. C. Grounding

The cold box steel casing must be properly grounded. Two grounding lugs are provided on the bottom of the cold box casing for this purpose.

IV. D. TEMPORARY BRACING

IV. D. Temporary Bracing

Before shipping, any piping susceptible to excessive deflection or shipping vibration is fitted with temporary bracing. These shipping supports are painted yellow and must be removed after the cold box is up righted and connected to field piping, but before it is filled with insulation. A drawing marked with the locations of all temporary bracing is provided with shipment.

EXERCISE EXTREME CARE TO KEEP ALL STEEL WORKING TORCHES AND FLAME CUTTING TOOLS AT A PROPER DISTANCE FROM INTERNAL EQUIPMENT IN ORDER TO PREVENT DAMAGE.

FAILURE TO REMOVE ALL TEMPORARY BRACING MAY RESULT IN SERIOUS BODILY INJURY OR DEATH AND PROPERTY DAMAGE AS WELL AS IRREPARABLE DAMAGE TO THE CHART EQUIPMENT AND THE VOIDING OF ANY WARRANTIES APPLICABLE TO THE EQUIPMENT.

IV. E. PERLITE INSULATION, F. NITROGEN PURGE SYSTEM

IV. E. Perlite Insulation

Perlite is typically used to insulate the open space inside the cold box. Perlite is a naturally occurring siliceous volcanic rock that expands 4 to 20 times its original volume when heated. Perlite can either be expanded on site or purchased in bulk already expanded. It is critical to keep the perlite dry during installation. Therefore, it is recommended that the top of the box be covered with plastic sheeting to prevent precipitation from accidentally entering the cold box during installation. Because perlite is extremely light, this also helps prevent wind from interfering with the installation process. The perlite will tend to settle over time. It is recommended to top off the perlite about 1 month after the initial filling.

IV. F. Nitrogen Purge System

Upon installation of the cold box, the nitrogen purge system must be fitted with the necessary components for operation (see Figure XIX). Typically a regulator is used to drop the pressure of the nitrogen purge supply to a low value, normally between (5 to 20) psig ([0.3 to 1.4] barg). A flow meter with integral needle valve are used to finely control the flow rate. The breather valve and emergency vent must be installed prior to connecting the nitrogen supply to the nitrogen purge system access connection to prevent overpressurization of the cold box interior.

FIGURE XIX

Typical Nitrogen Purge System

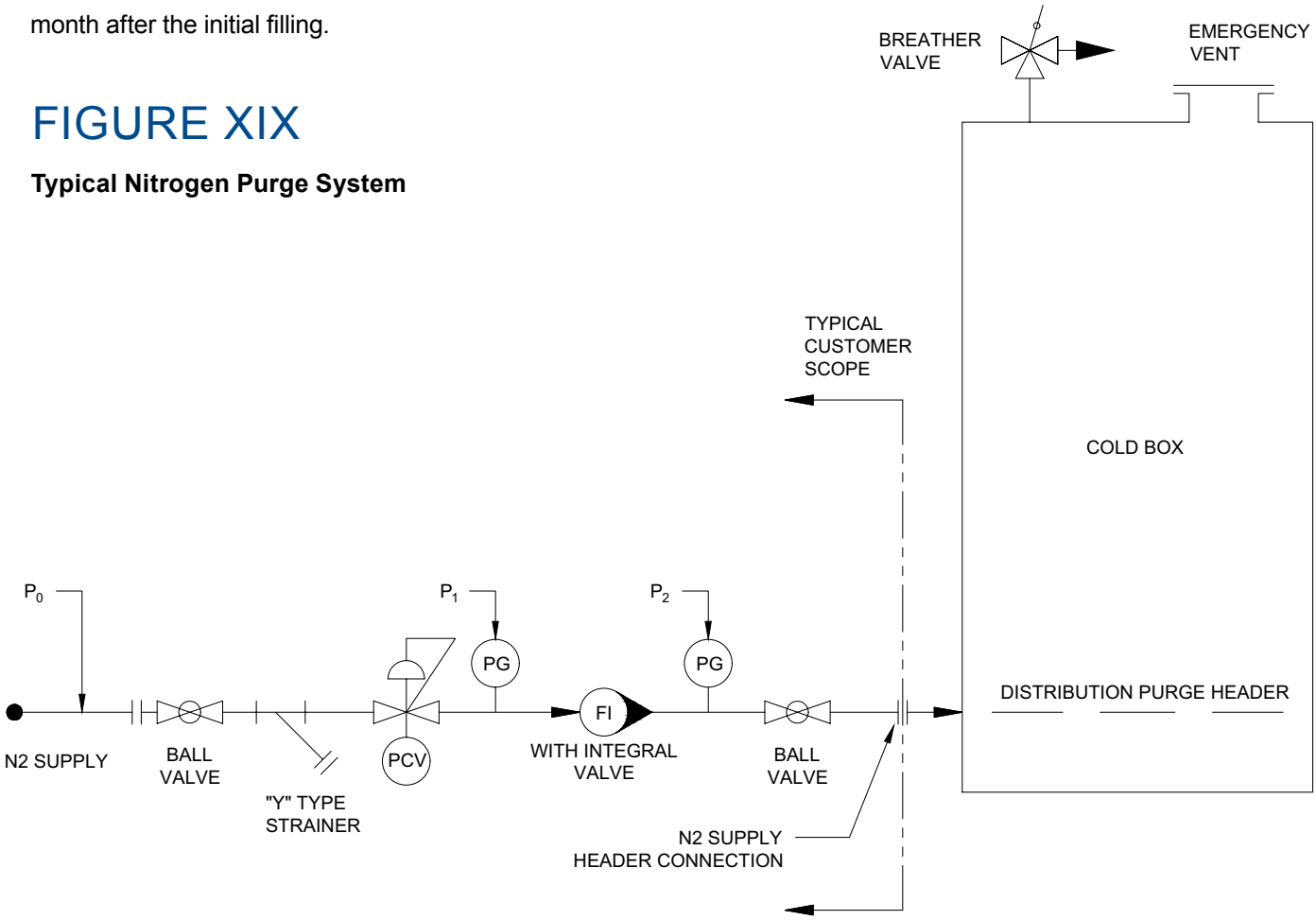

IV. G. FLANGED CONNECTIONS

IV. G. Flanged Connections

IV. G. 1. Pressure Testing With Shipping Blinds

Do not pressurize blind flanges above 25 psig (1.7 barg) without confirming blind flange design pressure.

IF A FIELD PRESSURE TEST IS TO BE CONDUCTED WITH PRESSURE ABOVE 25 PSIG (1.7 BARG) BEFORE THE BLIND FLANGE IS REMOVED, CONFIRM THE MAXIMUM WORKING PRESSURE RATING OF THE BLIND FLANGE.

OVERPRESSURIZATION OF BLIND FLANGES NOT DESIGNED FOR PRESSURE TEST PURPOSES COULD RESULT IN A RUPTURE OF THE FLANGED ENDS WHICH MAY RESULT IN SERIOUS BODILY INJURY OR DEATH AND PROPERTY DAMAGE AS WELL AS IRREPARABLE DAMAGE TO THE CHART EQUIPMENT AND THE VOIDING OF ANY WARRANTIES APPLICABLE TO THE EQUIPMENT.

IV. G. 2. Gaskets and Bolting

Aluminum or steel mating flanges are typically used with the Chart flanged connection.

Exercise care to protect the machined face of the flange against scratches, dents, or other damage that will reduce the effectiveness of the gasket in making a proper seal.

The two mating surfaces of the flanges must be parallel with each other prior to connecting. Flange faces must be aligned to the design plane to within 0.06 in/ft (0.5%) maximum, measured across the diameter of the flange mating surface, and flange bolt holes must be aligned to within 0.12 in (3 mm) maximum offset.

Connections should be made by gradually tightening diametrically opposite bolt pairs and tightening the pairs in a sequence which most uniformly loads the gasket. Installed bolts and gaskets shipped with the blind flange must not be used for making final connections as they are not designed for cryogenic service. Stainless steel bolts and nuts must be used for the final field connection for cryogenic service. Stainless steel washers must be used under the bolt heads or nuts on the aluminum flange, and threads should be lubricated for proper torque wrench applications.

INSTALLED BOLTS AND GASKETS SHIPPED WITH THE BLIND FLANGE MUST NOT BE USED FOR MAKING FINAL CONNECTIONS AS THEY ARE NOT DESIGNED FOR CRYOGENIC SERVICE. FAILURE TO REPLACE THE SHIPPING BOLTING WITH BOLTING ADEQUATE FOR THE INTENDED SERVICE CAN RESULT IN RUPTURE OF THE FLANGE JOINT AND COULD CAUSE SERIOUS PERSONAL INJURY OR DEATH.

IV. G. FLANGED CONNECTIONS

When bolting to Chart equipment provided with steel flanges, suitable gaskets and bolting should be selected giving consideration to the service pressure, service temperature, and internal fluids. Chart recommends consulting with a reputable gasket manufacturer for assistance in proper gasket selection and bolt torque recommendations. When bolting to Chart equipment supplied with aluminum flanges Chart has specific recommendations as follows:

Bolting Recommendations:

	Down to -50 °F (-45 °C)	Below -50 °F (-45 °C) Stud Diameters thru 1.5 inches (38 mm)	Below -50 °F (-45 °C) Stud Diameters above 1.5 inches (38 mm)
Studs	SA193 B7	SA320 B8 CL2	SA193 B8M2
Nuts	A194 GR 2H	SA194 GR 8	SA194 GR 8

IV. G. 3. Recommended Bolt Torques:

All bolting must be given a final tightening by torque wrench. Bolts are to be torqued to the full value shown in the table below and then re-torqued after 15 minutes. Torque values are based on a resultant bolt stress of 30,000 psi (207 MPa) assuming well lubricated studs, nuts, and washers.

Bolt Torques For Use With Aluminum Flanges:

Bolt Size (in)	TPI	Torque (ft-lbs)	Torque Increments
1/2	13	30	Snug, then full torque
5/8	11	60	
3/4	10	100	
7/8	9	160	Snug, 1/2 torque,
1	8	245	then full torque
1-1/8	8	355	
1-1/4	8	500	
1-3/8	8	680	
1-1/2	8	800	Snug, 1/3 torque, 2/3
1-5/8	8	1100	torque, then full torque
1-3/4	8	1500	
1-7/8	8	2000	
2	8	2200	Snug, 1/4 torque,
2-1/4	8	3180	1/2 torque, 3/4 torque,
2-1/2	8	4400	then full torque
2-3/4	8	5920	
3	8	7720	

IV. G. 4. Gasket Recommendations for Use With Aluminum Flanges:

Chart recommends Flexitallic Flexpro® gaskets or equivalent (m=2.0, y=2500 psi [17.2 MPa]). If stainless steel spiral wound gaskets are used, Chart recommends they be low seating stress such as Flexitallic LS (m=3.0, y=5000 psi [34.5 MPa]). If higher seating stress gaskets are selected consult Chart to determine if Chart's standard recommended bolt torques are adequate.

V. TESTING AND OPERATION

A. Operation of Nitrogen Purge System

B. Heat Exchangers

C. Strainers

D. Testing of Piping System

E. Initial Startup

V. A. NITROGEN PURGE SYSTEM, B. HEAT EXCHANGERS, C. STRAINERS, D. TESTING OF FIELD PIPING SYSTEM

V. A. Operation of Nitrogen Purge System (See Figure XIX)

Use the nitrogen purge pressure regulator (PCV) to set the pressure (P_1) entering the nitrogen purge flow meter (FI) within the range of (5 to 20) psig ([0.3 to 1.4] barg). The integral valve on the flow meter (FI) is used to finely control nitrogen flow. The nitrogen will flow through the nitrogen purge system, into the cold box casing interior, and leave via the breather valve on the roof. The breather valve is set to maintain a positive pressure on the cold box of 3.0 in$H_2$0 (7.5 mbarg). Project specific purge rates are provided with engineering documentation.

V. A. 1. Dehumidification Purge

Prior to startup, the cold box shall be purged of moisture that may have entered. After installation of the breather valve, emergency vent, and perlite, set the nitrogen flow rate to provide approximately two volume changes of the casing every 24 hours. Maintain this purge at least two days and until cold box interior is dry.

V. A. 2. Continuous Purge

Normal atmospheric pressure and temperature changes can cause the casing to breathe. Hence, a continuous purge set at a rate to provide approximately one volume change of the casing every 24 hours should be performed. It should also be performed during shutdowns to prevent ingress of moisture into the perlite.

If a continuous purge is not conducted during a shutdown, even though the casing is not opened, a check should be made for contaminants upon startup to see if a dehumidification purge should be performed.

V. B. Heat Exchangers

Refer to Chart Energy & Chemicals BAHX IOM Manual for specific testing instructions for brazed aluminum heat exchangers.

V. C. Strainers

Refer to Chart Energy & Chemicals BAHX IOM Manual for information on using strainers.

V. D. Testing of Field Piping System

DO NOT EXCEED THE TEST PRESSURE VALUE STATED ON THE COLD BOX CONSTRUCTION DRAWING. OVERPRESSURIZATION OF THE PIPING SYSTEM OR EQUIPMENT COULD RESULT IN A RUPTURE AND CAUSE SERIOUS PERSONAL INJURY OR DEATH.

Most codes require a pressure test of the field piping system after the unit is installed. Residual test liquid which may become trapped within the unit cannot be tolerated, since during operation the liquid may freeze and cause serious damage and possible failure of the equipment. Therefore, a pneumatic test is most often performed. The pneumatic proof test pressure shall comply with the requirements of the applicable code, but shall not exceed the test pressure shown on the Chart drawing.

V. D. INITIAL STARTUP

V. D. Initial Startup

Prior to initial startup of the cold box ensure that all plant piping is clear of dirt, debris, and other contaminants. Expect strainers and filters to require frequent cleaning during initial startup. It is critical that water or moisture is not allowed to enter the cold box process piping or steel casing prior to or during operation. If water ingress has occurred, it must be purged with dry gas (-40 °F [-40 °C] dew point or lower) until completely dry.

WATER IN THE COLD BOX PIPING OR CASING INTERIOR MAY FREEZE DURING OPERATION WHICH MAY RESULT IN SERIOUS BODILY INJURY OR DEATH AND PROPERTY DAMAGE AS WELL AS IRREPARABLE DAMAGE TO THE CHART EQUIPMENT AND THE VOIDING OF ANY WARRANTIES APPLICABLE TO THE EQUIPMENT.

VI. MAINTENANCE

A. General

B. Cleaning

C. Repairs and Service

D. Disposal

VI. A. GENERAL, B. CLEANING

VI. A. General

The owners and operators should establish an inspection schedule based on service, operating conditions, and code requirements

The inspections should also be performed if damage is suspected, or if there is concern about the current status of the cold box, or lack of knowledge of the operating history of the cold box.

A maintenance log must be kept to record normal operating procedures, any plant upsets, shut downs, and any other operating conditions.

Potential warning signs where equipment requires inspection or repair prior to continued operation:

- Frost spots on cold box wall
- Indications from gas detection sensors
- Visible signs of corrosion
- Excessive venting
- Changes in internal cold box pressure

If any of these warning signs are present contact Chart

Prior to the inspection, testing, or repairing of any unit, whether in service or recently removed from operation, the system must be safety checked and cleared prior to the admittance of personnel for any inspection or service function.

PRIOR TO THE INSPECTION, TESTING, OR REPAIRING OF ANY UNIT, WHETHER IN SERVICE OR RECENTLY REMOVED FROM OPERATION, THE SYSTEM MUST BE SAFETY CHECKED AND CLEARED PRIOR TO THE ADMITTANCE OF PERSONNEL.

CONTACT CHART PRIOR TO THE INTRODUCTION OF ANY CLEANING FLUID TO THE COLD BOX SYSTEM TO ENSURE COMPATIBILITY WITH THE SYSTEM. INTRODUCTION OF INCOMPATIBLE CLEANING FLUID MAY COLLAPSE OR CORRODE EQUIPMENT OR STRUCTURES WHICH MAY RESULT IN SERIOUS BODILY INJURY OR DEATH AND PROPERTY DAMAGE AS WELL AS IRREPARABLE DAMAGE TO THE CHART EQUIPMENT AND THE VOIDING OF ANY WARRANTIES APPLICABLE TO THE EQUIPMENT.

VI. B. Cleaning

If cleaning of the process piping or equipment inside the cold box is to occur, caution must be taken to ensure that the cleaning method does not harm the cold box or the equipment it contains.

VI. B. CLEANING, C. REPAIRS AND SERVICE, D. DISPOSAL

If the cleaning method involves introducing a non-design fluid into the system, care must be taken to ensure that the internal supports can withstand the additional weight of the cleaning fluid and that the allowable pipe stresses are not exceeded. The supports are designed for the weight of the process fluid according to the design specifications only. The additional weight of a higher density cleaning fluid may cause collapse of equipment, piping, or support systems.

Care must be taken to adhere to the corrosion and temperature guidelines for aluminum stated in the BAHX IOM Manual. Contact Chart to ensure cleaning fluid compatibility with the cold box design.

VI. C. Repairs and Service

If leaks develop in the process piping or equipment inside the cold box, the breather valve will continue to vent, but the cold box pressure may rise. If it reaches 4.0 in$H_2$0 (10 mbarg), the emergency vent will open to prevent structural damage to the casing. The internal cold box pressure will stabilize after the emergency vent has activated. The emergency vent cover should not be replaced until the cause of the leak has been corrected.

If a leak is detected, notify Chart for repair recommendations. Chart is well qualified and staffed to perform field or factory service and repair on this type of equipment. Refer to the serial number shown on the unit nameplate when contacting Chart.

Repair to the cold box or the equipment inside should only be made by Chart authorized personnel. Repairs made during the warranty period by unauthorized service personnel will void the Chart warranty.

VI. D. Disposal

Chart encourages recycling whenever possible. Disposal should be in accordance with all applicable laws and regulations.

NOTES

NOTES

Chart Energy & Chemicals, Inc. is an ISO:9001 and ISO:14001 registered company

Chart Energy & Chemicals, Inc.
2191 Ward Avenue
La Crosse, WI 54601 USA
Phone: 608-787-3333
Fax: 608-787-2141
www.chartindustries.com

8665 New Trails Drive, Suite 100
The Woodlands, TX 77381 USA
Phone: 281-364-8700
Fax: 281-364-8706

3415 Earl B. Wilson
New Iberia, LA 70560 USA
Phone: 337-369-9195
Fax: 337-364-8758

Chart Lifecycle, Inc.
E-mail: info@ChartLifecycle.com
24/7 hotline: 1-844-GTLS-911 (1-844-485-7911)
www.ChartLifecycle.com

INSTALLATION, OPERATION, AND MAINTENANCE MANUAL

FOR CHART COLD BOX ASSEMBLIES

CHART®

Innovation. Experience. Performance.®

JULY 2017