Companion Reservoir

C31 & C41—EU

Figure 1 Parts

Item Number	Description	Quantity	Bubble Seq No
B-701002-00	SCREW, PAN HEAD 1/4-28 X 1 1/4	1	1
B-778979-00	RETAINING WASHER, SHROUD	1	2
B-700487-00	CONTENTS INDICATOR LABEL	1	3
10031298	LABEL, WARNING, LIQUID PHASE	1	4
* See Note	STATIONARY WARNING LABEL	1	5
B-776080-00	COVER-TOP	1	6
10021338	LABEL, WARNING, GAS PHASE	1	7
* See Note	TPED C41 CE LABEL	1	8
* See Note	TPED C31 CE LABEL	1	8
* See Note	TPED C21 CE LABEL	1	8
B-775101-00	SHROUD BODY	1	9
B-700488-00	VENT VALVE LABEL	1	10
CA002305	PHPNHMS SS #6-32X3/8"LG	5	11
B-775132-00	O-RING,MANIFLD SEAL	1	12
B-701359-00	ELBOW, DRAIN BOTTLE	1	13
B-701360-00	BRACKET, DRAIN BOTTLE	1	14
B-701320-00	DRAIN BOTTLE	1	15
B-701362-SV	DRAIN BOTTLE KIT	1	16
B-702094-SV	C31 DEWAR	1	17
B-702095-SV	C41 DEWAR	1	17

* Note: Reference Service Bulletin 21174579

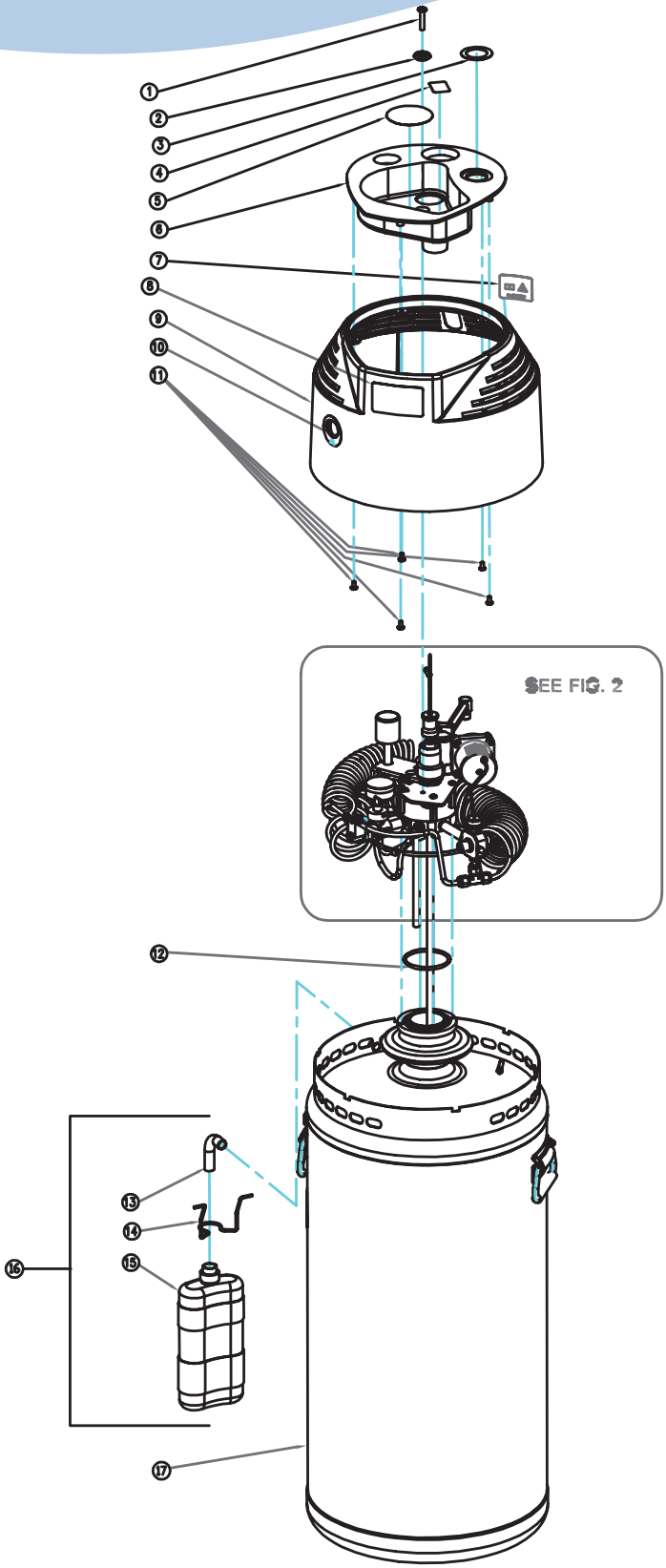

Figure 1: Companion Reservoir Exploded

Companion Reservoir

C31 & C41—EU

Figure 2 Parts

Item Number	Description	Quantity	Bubble Seq No
205705851	SCREW - #10-24 X 3/8 LG	2	1
B-775845-SV	CONTENT INDICATOR C-21	1	2
B-775846-SV	CONTENT INDICATOR C-31	1	2
B-775847-SV	CONTENT INDICATOR C-41	1	2
B-776168-00	KNOB-FCV (12 POSITION)	1	3
B-775834-00	0-6 FCV DECAL	1	4
20705971	SCREW, FH, 6-32 X 1/4", SS	2	5
B-775877-00	PLATE-FLOWLOCK (12 POSITION)	1	6
B-775855-FLO	FCV 0.25-6 LPM	1	7
B-775314-00	EXTENSION ASSY HUMID ADAPTER	1	8
B-775447-00	ADAPTER 1/8X1/8 NPT	1	9
15075347	DUST CAP S/A BLK W/RND ORING	1	10
B-775116-00	SCREW - 10-24 UNC X 3/8 LG	1	11
B-775117-00	SCREW - #10-24 X 3/8 LG	3	12
2911071	LOCKWASHER, #10, SS	1	13
B-776078-00	PRESSURE GAUGE	1	14
B-776079-00	FEMALE CONNECTOR	1	15
B-776077-00	GAUGE MOUNTING BRACKET	1	16
B-775110-00	MOUNTING PLATE, C-21/31/41	1	17
B-775176-00	SCREW SS BHCS 6-32 X 3/8" LG	2	18
B-775108-00	STANDOFF, MANIFOLD, C-21/31/41	4	19

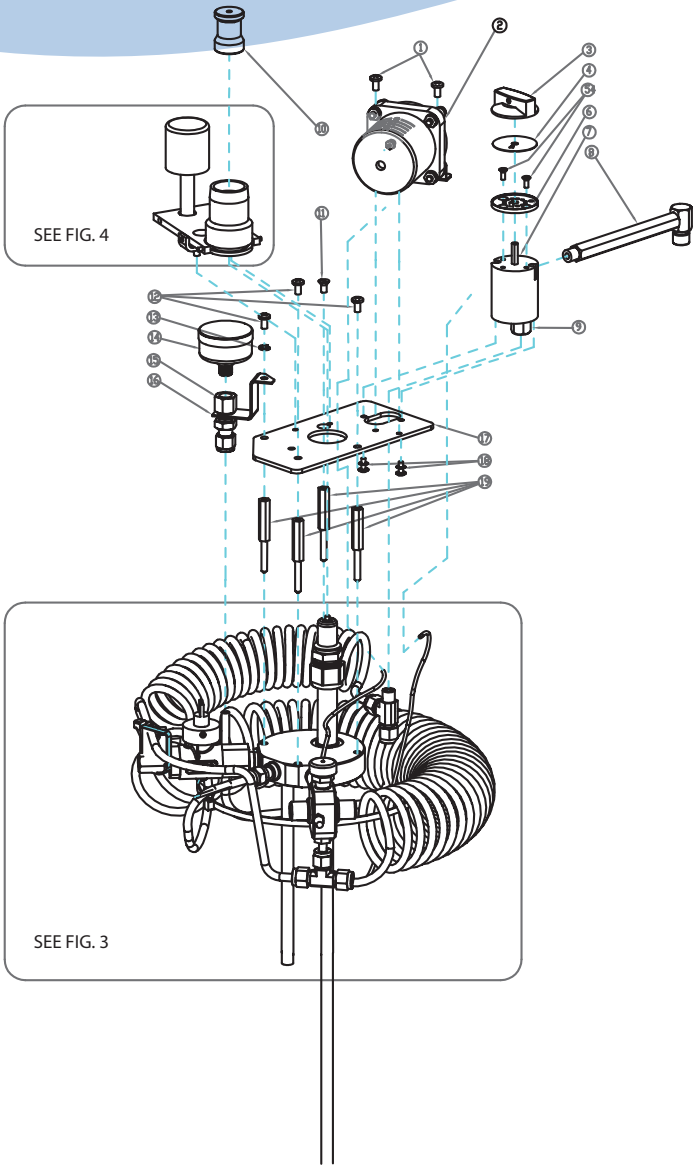

Figure 2: Companion Pressure Gauge Exploded

Companion Reservoir

C31 & C41—EU

Figure 3 Parts

Item Number	Description	Quantity	Bubble Seq No
B-775794-00	PRESS ON HOSE CLAMP	2	1
20537653S	SENSOR LINE LLG LOW 5”	1	2
B-775139-00	VALVE, SECOND-ARY RELIEF, 30PSI	1	3
B-778167-00	BARBED HOSE FIT-TING .050	1	4
10002368	RELIEF/ECONO-MIZER VALVE,	1	5
20590844	MUFFLER SINTERED	1	6
B-775856-SV	SENSOR LINE LLG HIGH 12”	1	7
B-775794-00	PRESS ON HOSE CLAMP	2	8
15055709-SV	WARMING COIL	1	9
15055688-SV	ADAPTER TEE S/A R/E TO WARMING COIL	1	10
CA403730	COIL STRAP	2	11
15092391-SV	C41 MANIFOLD ASSY	1	12
15092382-SV	C31 MANIFOLD ASSY	1	12
15092374-SV	C21 MANIFOLD ASSY	1	12
20580870	VENT-TO-FILL VALVE	1	13
B-775329-00	EXTENSION, VENT WITH ORIFICE	1	14
11020621	O-RING #004 VITON 75 DURO	1	15
B-775063-00	FERRULE BRS 1/4	1	16
B-775265-00	NUT BRS TUBE 1/4	1	17
15055725-SV	BREATHING COIL	1	18
B-775448-00	FITTING, TEE, 1/4” TUBE	1	19
10023694	BLOCK SPACER COIL FOAM	1	20
CA403730	COIL STRAP	1	21
15072736	COIL PRESSURE GAGE	1	22

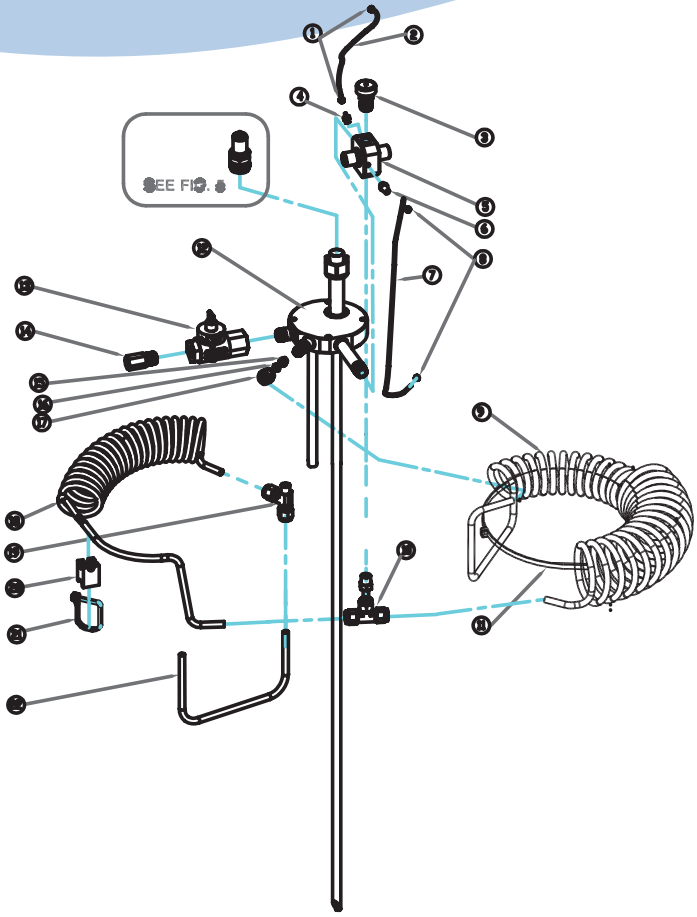

Figure 3: Companion Reservoir Plumbing Exploded

Companion Reservoir

C31 & C41—EU

Figure 4 Parts

Item Number	Description	Quan-tity	Bubble Seq No
B-775113-00	BUTTON, QC RELEASE ASSY	1	1
B-775192-00	STUD - #6-32 X 1/2 LONG	1	2
B-775112-00	ROD QC RELEASE ASSY	1	3
B-775119-00	O RING	2	4
B-775115-00	PIN SPRING, 1/8" X 1" SS	1	5
B-775114-00	PIN, SPRING, 1/8" X 1/2", SS	2	6
B-775111-00	LEVER, QC RELEASE ASSY	1	7
B-775118-00	SPRING, QC RELEASE ASSY	1	8
B-775116-00	SCREW - 10-24 UNC X 3/8 LG	2	9
B-775109-00	BRACKET PIVOT	1	10
B-775114-00	PIN, SPRING, 1/8" X 1/2", SS	2	11
B-775106-SV	ASSY, QC RELEASE, C-21/31/41	1	12

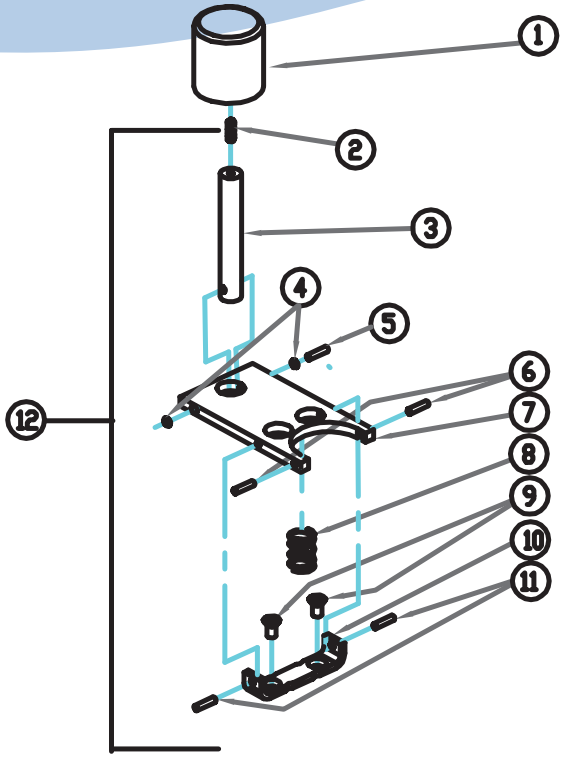

Figure 4: Companion Reservoir Quick Release Exploded

Figure 5 Parts

Item Number	Description	Quantity	Bubble Seq No
B-775107-00	ACTUATOR, QC RELEASE ASSY	1	1
15101621	ASSY, QUICK CONNECT, MALE	1	2

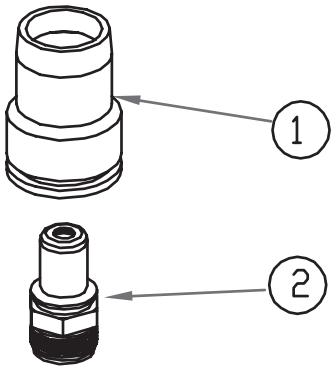

Figure 5: Companion Reservoir Exploded

Chart Inc. reserves the right to discontinue its products, or change the prices, materials, equipment, quality, descriptions, specifications and/or processes to its products at any time without prior notice and with no further obligation or consequence. All rights not expressly stated herein are reserved by us, as applicable.