AirSep® Corporation
PSA Oxygen Generator
Models AS-D+ – AS-P
with Touchscreen

Instruction Manual

MN150-1 Rev B 07/14

AirSep® Corporation • 260 Creekside Drive • Buffalo, NY 14228-2075 USA
Phone: (716) 691-0202 • Fax: (716) 691-1255 • www.airsep.com

Ownership Data

Please take a moment to note below important information about your AirSep® Corporation PSA Oxygen Generator. Retain this instruction manual, along with your invoice, to serve as a permanent record of your purchase.

PSA Oxygen Generator

Model Number:

Serial Number:

Invoice Date:

Start-up Date:

AirSep Representative

Company:

Contact:

Address:

City/Town: State: Zip:

Country: Fax:

Phone: Telex:

WARNING	Before you attempt to install, operate, or repair the oxygen generator, read and thoroughly understand this instruction manual. Improper operation can result in severe bodily injury, damage to the oxygen generator, or poor performance.

Table of Contents

1.0 Introduction..... 1-1

1.1 General..... 1-1

1.2 Warnings, Cautions, and Notes..... 1-1

1.3 References to Controls and Indicators with Tags or Labels..... 1-2

2.0 Safety..... 2-1

2.1 General..... 2-1

2.2 Potential Hazards..... 2-1

2.3 Safety Publications..... 2-3

3.0 System Description..... 3-1

3.1 General..... 3-1

4.0 Components Description..... 4-1

4.1 External Components..... 4-1

4.2 Manifold Components..... 4-2

4.3 Control Panel: External Components..... 4-5

4.4 Control Panel: Internal Components..... 4-12

4.5 Accessory Kits..... 4-12

5.0 Installation..... 5-1

5.1 Handling and Unpacking..... 5-1

5.2 Pre-installation Guidelines..... 5-2

5.3 Installation Instructions..... 5-3

6.0 Operation 6-1

6.1 Initial Start-up..... 6-1

6.2 Operation..... 6-3

6.3 Shutdown..... 6-3

6.4 Extended Shutdown..... 6-3

6.5 Start-up after an Extended Shutdown..... 6-4

7.0 Maintenance..... 7-1
7.1 Daily Monitoring..... 7-1
7.2 Monthly Monitoring..... 7-1
7.3 Depressurizing the Filters..... 7-2
7.4 Changing Filter Elements..... 7-3
7.5 Depressurizing the Oxygen Generator..... 7-4
7.6 Adjusting the Feed Air Regulator..... 7-4

8.0 Troubleshooting..... 8-1
8.1 Technical Support..... 8-1
8.2 Troubleshooting Chart..... 8-1

A Appendix Technical Data..... A-1

B Appendix Warranty/Returns..... B-1

C Appendix Parts List..... C-1

D Appendix Component Literature..... D-1

E Appendix..... E-1

List of Illustrations

Figure 4.1: External Components — Front View..... 4-1

Figure 4.2: Manifold Components — AS-L Model..... 4-3

Figure 4.3: Typical Main System Control Screen..... 4-6

Figure 4.4: HMI Navigation Layout..... 4-7

Figure 4.5: Typical Oxygen Generator Screen..... 4-8

Figure 4.6: Typical Parameters and Output Screen..... 4-9

Figure 4.7: Typical Bed Pressure Graphs Screen..... 4-9

Figure 4.8: Typical Bed Pressure Calibration Screen..... 4-10

Figure 4.9: Feed Air Pressure Transducer Assembly..... 4-11

Figure 5.1: Typical Installation Arrangement 5-3

Figure A.1: Typical Pressure Profile and Valves Cycle Sequence..... A-12

Figure A.2: Typical Installation Arrangement..... A-13

Figure A.3: General Arrangement Drawing – AS-D+..... A-14

Figure A.4: Flow Schematics – AS-D+ A-15

Figure A.5: General Arrangement Drawing – AS-E..... A-16

Figure A.6: Flow Schematic – AS-E..... A-17

Figure A.7: General Arrangement Drawing – AS-G..... A-18

Figure A.8: Flow Schematic – AS-G…….. A-19

Figure A.9: General Arrangement Drawing – AS-J…… A-20

Figure A.10: Flow Schematic – AS-J…… A-21

Figure A.11: General Arrangement Drawing – AS-K…… A-22

Figure A.12: Flow Schematic – AS-K…… A-23

Figure A.13: General Arrangement Drawing – AS-L…… A-24

Figure A.14: Flow Schematic – AS-L…… A-25

Figure A.15: General Arrangement Drawing – AS-N…… A-26

Figure A.16: Flow Schematic – AS-N…… A-27

Figure A.17: General Arrangement Drawing – AS-P…… A-28

Figure A.18: Flow Schematic – AS-P…… A-29

Figure A.19: Electrical Schematic – Sheet 1…… A-31

Figure A.20: Electrical Schematic – Sheet 2…….. A-32

Figure A.21: Electrical Schematic – Sheet 3…… A-33

Figure A.22: Electrical Schematic – Sheet 4…… A-34

1.0 Introduction

1.1 General

This instruction manual provides a description of the AirSep Corporation PSA Oxygen Generator Models AS-D+, AS-E, AS-G, AS-J, AS-K, AS-L, AS-N and AS-P, as well as instructions for their installation, operation, and maintenance. The Appendix of this instruction manual also includes pertinent drawings and component literature.

To ensure safe operation and proper maintenance of the oxygen generator, AirSep Corporation recommends keeping this instruction manual readily available for reference.

1.2 Warnings, Cautions, and Notes

As you read this instruction manual, pay special attention to the WARNING, CAUTION, and NOTE messages. They identify safety guidelines or other important information as follows:

Provides information that can prevent severe bodily injury or death.

Cautions against the risk of electric shock.

Provides information important enough to emphasize or repeat.

1.3 References to Controls and Indicators with Tags or Labels

This instruction manual uses uppercase characters (e.g., ON/OFF switch) to refer to controls and indicators identified by tags or labels. Numbers inside parentheses (e.g., V-2) identify manually operated flow controls (e.g., manual valves). Refer to Chapter 4 for description of the oxygen generator components for each model.

2.0 Safety

2.1 General

Oxygen, the most abundant of the elements, makes up approximately 50 percent of the earth's crust. In its free state, oxygen forms approximately one-fifth of air by volume. Although classified as a non-flammable gas, oxygen supports combustion. As an active element, it combines directly or indirectly with all the elements except the rare gases. Oxygen is an invisible gas that is colorless, odorless, and tasteless.

To ensure your safety, thoroughly read and familiarize yourself with the entire section of this instruction manual. In addition, AirSep Corporation strongly recommends that you review this section periodically.

2.2 Potential Hazards

Oxygen vigorously accelerates the burning of combustible materials. In an oxygen-enriched atmosphere, many materials that do not burn in normal air require only a slight spark or moderate heat to set them aflame.

To reduce the risk of fire or explosion, keep gasoline, kerosene, oil, grease, cotton fibers, wood, paint, and other combustible material away from all parts of the oxygen generator.

Do not allow smoking, open flame, or usage of electronic devices that may generate sparks (e.g., cellular telephones) near the oxygen generator.

Post "NO SMOKING OR OPEN FLAMES" signs conspicuously near the location of the oxygen generator.

Take extreme care to keep all oxygen piping and vessels clean. To avoid fire or explosion, oxygen clean all surfaces that can come in contact with the product oxygen. Check all oxygen fittings for leaks with an oxygen-compatible, leak-detecting solution.

To prevent fire or electrical shock, locate the oxygen generator indoors, away from rain or any other type of moisture.

Before attempting to install, operate, or repair the oxygen generator, read and thoroughly understand this instruction manual and the component manuals located in the Appendix D of this instruction manual. Improper installation, operation, or repairs can result in severe bodily injury, damage to the oxygen generator, or poor performance.

The interior of the oxygen generator control cabinet contains electrical parts that can produce an electrical shock hazard if not handled properly. To prevent electrical shock, read and thoroughly understand Section 8 — Troubleshooting in this instruction manual before servicing the oxygen generator.

AirSep oxygen generators are sold for use in industrial applications only. Contact AirSep Corporation, or an authorized AirSep representative, before using this unit for any medical application.

Disconnect power before servicing oxygen generator.

Do not disconnect protective earth

2.3 Safety Publications

The safety section of this instruction manual is not a complete summary of required safety precautions. Review the following publications for additional information on the safe handling of oxygen:

- "Installation of Bulk Oxygen Systems at Consumer Sites;" NFPA No. 50; National Fire Protection Association; 1 Batterymarch Park; P. O. Box 9101; Quincy, Massachusetts 02269-9101 USA.
- "Oxygen;" Pamphlet G-4; Compressed Gas Association; 1725 Jefferson Davis Highway; Arlington, Virginia 22202-4102 USA.
- "Cleaning Equipment For Oxygen Service," Pamphlet G-4.1; Compressed Gas Association; 1725 Jefferson Davis Highway; Arlington, Virginia 22202-4102 USA.

3.0 System Description

3.1 General

Air Contains 21 % oxygen, 78% nitrogen, 0.9% argon, and 0.1% other gases. AirSep PSA Oxygen units separate oxygen from compressed air through a unique Pressure Swing Adsorption (PSA) process. The compressed air flows through a filter assembly before the air enters the adsorber vessels. A particulate filter removes condensed water, oil, dirt, scale, etc. from the feed air and then a separate coalescing filter (mounted on most of the models) removes additional oil and water vapor.

The oxygen generator uses, in its adsorber vessels, an inert ceramic material called molecular sieve to separate compressed air into oxygen and the other gases. The unique properties of molecular sieve allow it to attract, or adsorb, nitrogen physically from air under pressure. This allows oxygen to exit the adsorbers as a product gas. The process valves on the oxygen generator then direct the oxygen to the oxygen receiver for storage until needed by your application.

While one adsorber produces oxygen, the other depressurizes to exhaust the waste gases it adsorbed (collected) during the oxygen production cycle. The entire oxygen generating process is completely regenerative, which makes it both reliable and virtually maintenance-free. The molecular sieve does not normally require replacement.

This instruction manual serves as the guidelines for the standard AS-D+ thru AS-P models. Refer to the illustrations, located in the Appendix A, for the detailed flow diagram, electrical schematic, and the general arrangement drawings of the oxygen generator models referenced in this instruction manual.

4.0 Components Description

The drawings in this section illustrate the location of the main components of the various oxygen generator models. All models include similar components unless noted otherwise; however, the location and size of these components varies among the different models. Refer to the Appendix for general layout drawings and specifications for all the oxygen generator models referenced in this instruction manual. In addition, the oxygen generator requires use of an oxygen receiver to provide stable flow and purity for short-term surges of feed oxygen above the rated capacity of the oxygen generator.

4.1 External Components

Figure 4.1 below illustrates the external components viewed from the front of the oxygen generator.

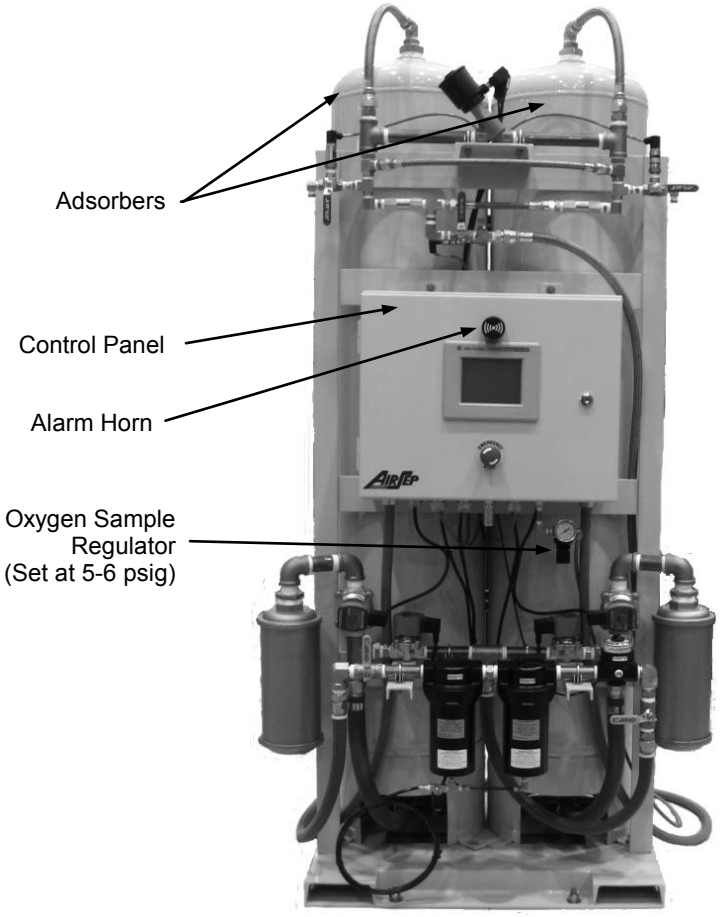

AS-G Series Model

Figure 4.1: External Components — Front View

4.1.1 Adsorbers

The adsorbers, or beds, are vessels that contain the molecular sieve used to adsorb (attract) nitrogen from compressed air and allow oxygen to pass through as the product gas.

4.1.2 Connections

The oxygen generator provides the connections described below.

Air Inlet

The feed air inlet provides a connection for the feed air hose from the air compressor.

Oxygen Outlet

The oxygen outlet provides a connection for the oxygen hose to the oxygen receiver.

Condensate Drain Outlet

The condensate drain outlet provides a connection for a hose to drain condensate from the oxygen generator filters (not applied for all the models).

4.2 Manifold Components

Figure 4.2 below illustrates the manifold components of the oxygen generator. The location and the presence of components may vary between the various models of the generator.

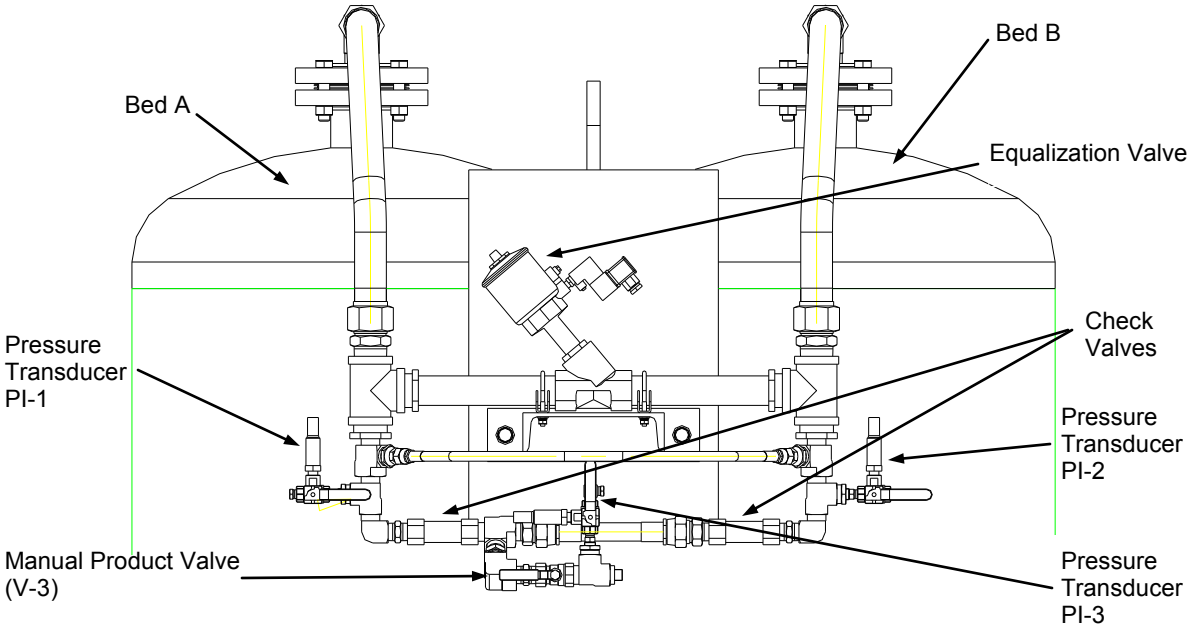

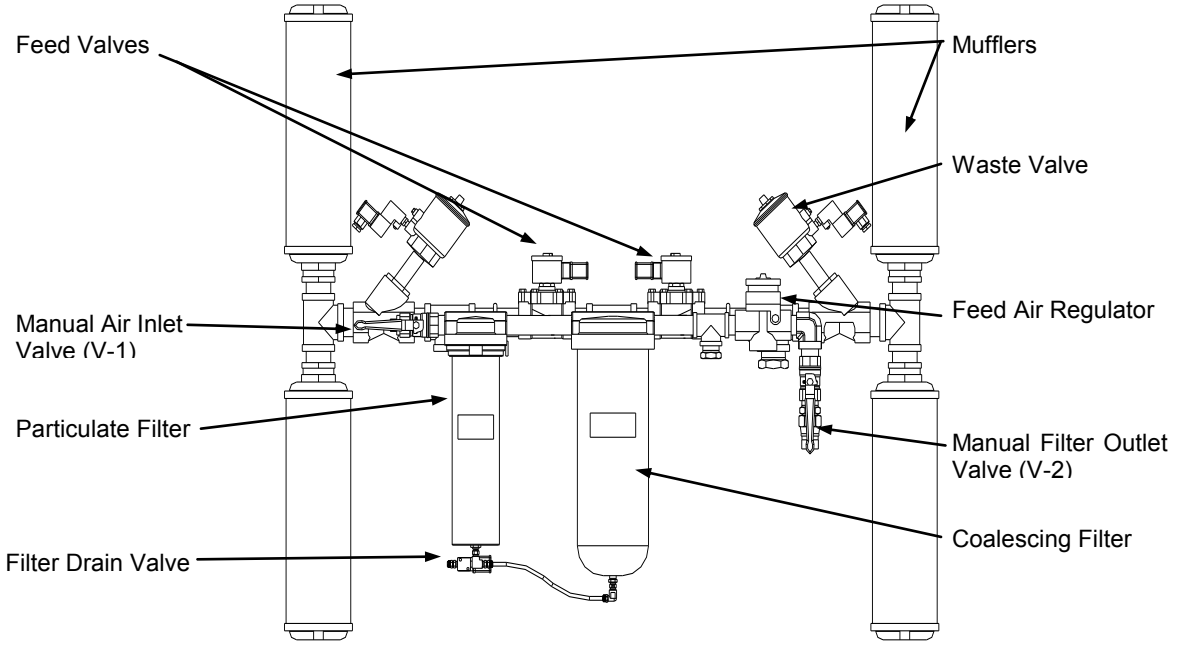

Figure 4.2: Manifold Components — AS-L Model

Manual Air Inlet Valve (V-1)

This manual valve controls the flow of feed air from the air compressor to the filter assembly. It is named manual feed # 1 valve (V-1).

Particulate Filter

The particulate filter, or prefilter, removes particulates from the feed air before the air enters the coalescing filter and then the adsorbers.

Coalescing Filter

The coalescing filter removes condensed water, oil vapor, and other contaminants from the feed air before the air enters the adsorbers.

Feed Air Regulator

The feed air regulator is set at the AirSep Corporation factory. It controls the maximum oxygen generator cycle pressure. The setting of the regulator is customized as per the demand of oxygen for your application. Please ensure that the feed air regulator setting is not changed before consulting AirSep Corporation.

Setting the feed air regulator to a value such that the maximum oxygen generator cycle/bed pressure is 80 psig or more can cause severe damage to the molecular sieve in the adsorbers which will not be covered under AirSep's warranty.

Filter Drain Valve

This automatic valve removes moisture from the filters through tubing connected to an outlet of the filters.

Manual Filter Outlet Valve (V-2)

This manual valve controls the flow of feed air from the feed air regulator after the filters to the automatic feed air valves. It is named manual feed # 2 valve (V-2).

Automatic Feed Air Valves

The automatic feed air valves control the flow of the feed air as the air enters the adsorbers.

Automatic Waste Valves

The automatic waste valves control the flow of waste gas as it exits the adsorbers.

Pneumatic Equalization Valve

The pneumatic equalization valve enables the pressure in the adsorbers to equalize after the product oxygen exits from one of the adsorbers.

Manual Product Valve (V-3)

The manual product valve controls the flow of product oxygen from the absorbers.

Check Valves – not available on AS-D+ models

The check valves ensure that product gas does not flow back into the adsorbers.

Relief Valves (not shown)

The relief valves, one on each adsorber, ensure that the pressure in the adsorbers does not exceed the rated maximum pressure of the adsorbers.

Flow Controller (not shown) – available on AS-D+ models only

The flow controller ensures consistent flow of the delivered product oxygen.

4.3 Control Panel: External Components

Allen-Bradley Touch Screen

The touch screen on the oxygen generator control panel uses a series of screen pages to perform the following functions:

- Provides a normal start-up system
- Monitors and controls the operation of the process valves
- Monitors signals coming from pressure transducers
- Provides an alarm system to indicate malfunctions in the PSA Oxygen Generating System
- Provides a fail-safe shutdown in the event of loss in product purity

The main Human/Machine Interface (HMI) consists of the Allen Bradley PanelView Plus 600 Touch screen. The PanelView Plus has a 5.5” screen, which is touch-sensitive.

In order to make the software simple to use, the various screens follow a consistent template design. Each screen consists of two components: the title bar and the information display.

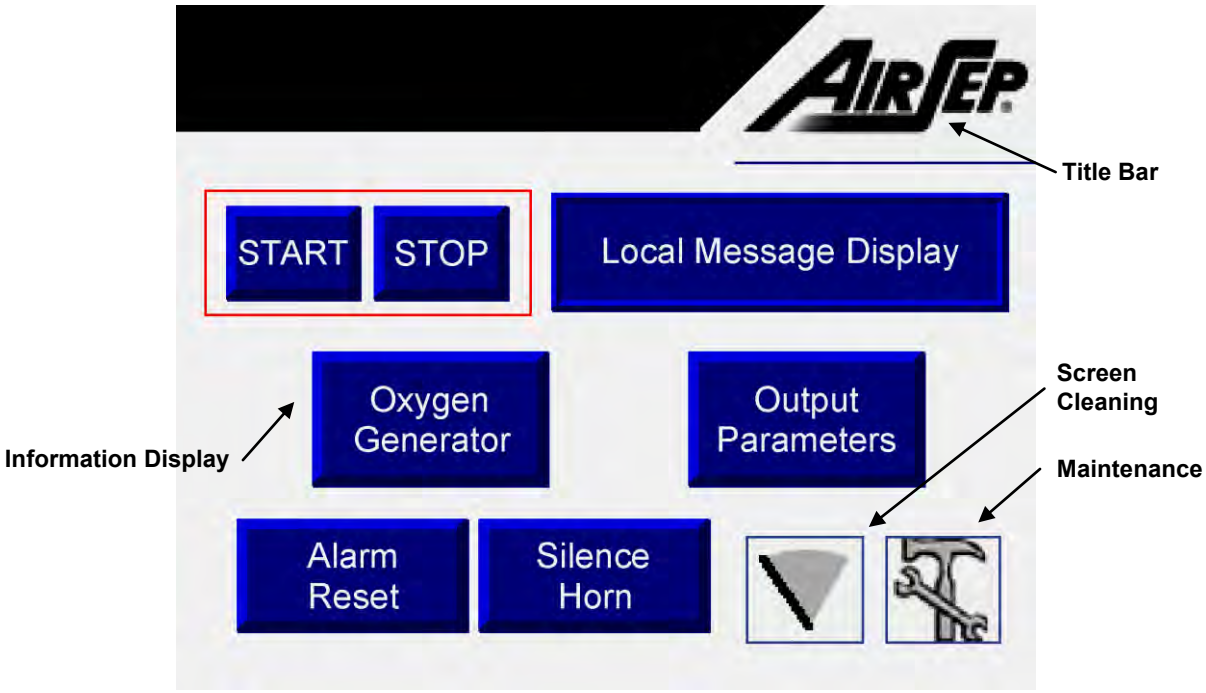

Figure 4.3: Typical Main System Control Screen

The title bar serves two purposes. It identifies the screen that is currently being displayed. It also acts as the main navigational tool.
No matter which screen is being currently displayed, touching the AirSep logo will display the Main System Control screen.

The “Information Display” changes depending on the screen currently displayed. However, they all share three basic components: Monitoring Devices, Message Displays, and Interface Mechanisms. Monitoring Devices are components that are used to relay real-time information about the system, like pressure graphs. Message Displays are used to relay information pertaining to the system in a text format. These displays are also used to present help pages that can be used to better understand the unit. Interface Mechanisms are screen items that can be used to interface directly with the system. These are in the form of buttons, switches, or icons.

The Main System Control Screen is the primary source for information on the whole unit. In the top left corner of the information display are the buttons that will start and stop the oxygen generator.

Every time an alarm or shutdown condition is displayed on the ‘Local Message Display’ (Refer to Figure 4.3), rectify the cause and press the ‘Alarm Reset’ icon to bring the system into normal mode before starting.

The ‘Local Message Display’ icon displays the different status of the generator namely Stopped, Running, Standby, and Alarm. The icons ‘Oxygen Generator’ and ‘Output Parameters’ take the user to dedicated screens described later in this section. Lastly, by touching ‘Screen Cleaning’ icon at the bottom right corner of the

information display, a blank screen for cleaning purpose is displayed and the 'Maintenance' icon will display a screen that provides guidelines for the general maintenance of the unit. The 'Silence Horn' icon bypasses the horn for 10 minutes during an alarm or shutdown condition.

Figure 4.4 below shows the layout of all the screens in HMI for easy navigation.

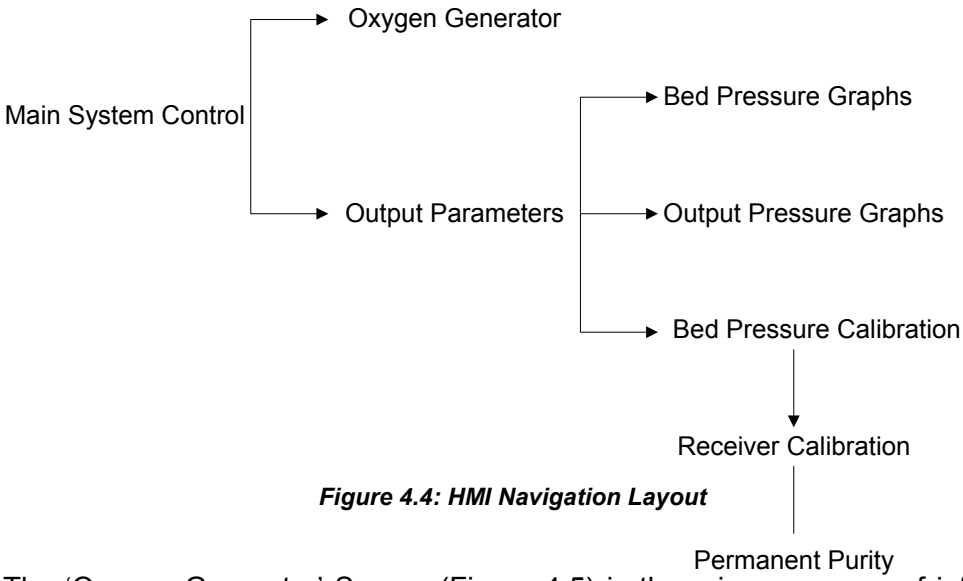

Figure 4.4: HMI Navigation Layout

The 'Oxygen Generator' Screen (Figure 4.5) is the primary source of information pertaining to the actual oxygen generation process. The adsorber vessels (also called beds – Bed A is the bed on your left while facing the control panel and Bed B is on your right while facing the control panel) are shown in the center of the screen and the oxygen receiver vessel is shown on the right hand side of the screen. The receiver has a numeric pressure display. Additionally, the diagram shown will animate to indicate which valves are currently being actuated. The 'AUTO/MAN' icon selects the operating mode for the oxygen generator. In the AUTO position, the oxygen generator cycles on and off to meet oxygen demand.

When the pressure in the product output manifold increases to approximately the maximum pressure specified in the Appendix A, the oxygen generator stops oxygen production after a timed delay and enters standby mode. To prevent short cycling and maintain purity, the oxygen generator continues to operate for five additional cycles after increased pressure in the product output manifold. This five-cycle delay to shutdown functions only in the Auto mode.

When the pressure in the product output manifold decreases to approximately the minimum pressure specified in the Appendix A, the oxygen production begins.

In the MANUAL position, the oxygen generator cycles continuously. The symbol 'A' at the right side of the 'AUTO/MAN' switch appears only when the oxygen generator is in AUTO mode.

The 'MANUAL DRAIN' icon activates the drain valve when pressed.

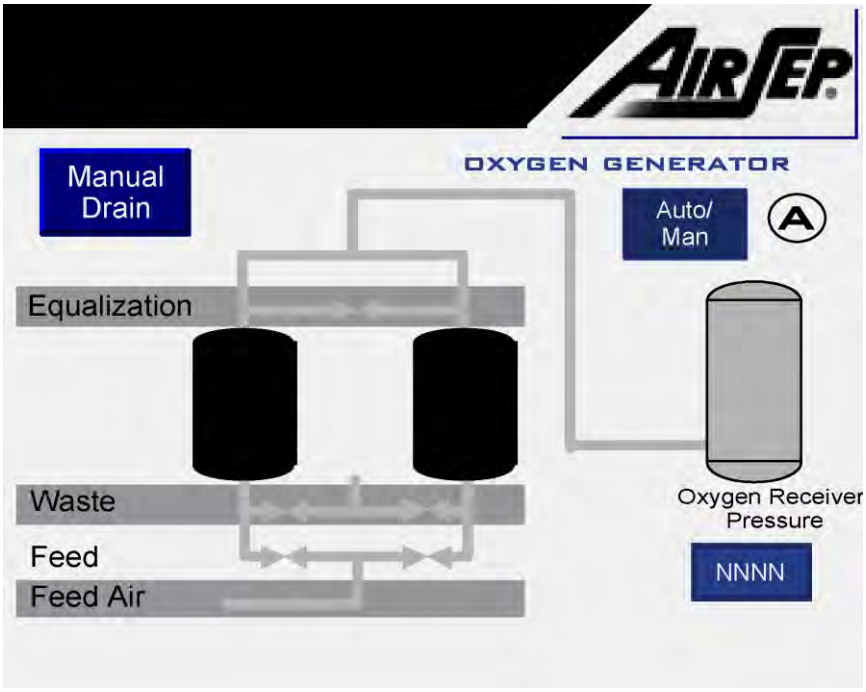

Figure 4.5: Typical Oxygen Generator Screen

The 'Parameters and Output' Screen (Figure 4.6) is the main location to observe the several parameters of the oxygen generator. The bed pressures, oxygen receiver pressure, oxygen purity, and the number of working hours are all displayed here via Message Displays. The 'Yearmeter' counts 8000 hours as one year so that after 8000 hours, 'Hourmeter' resets to zero and the 'Yearmeter' counter increases by unity.

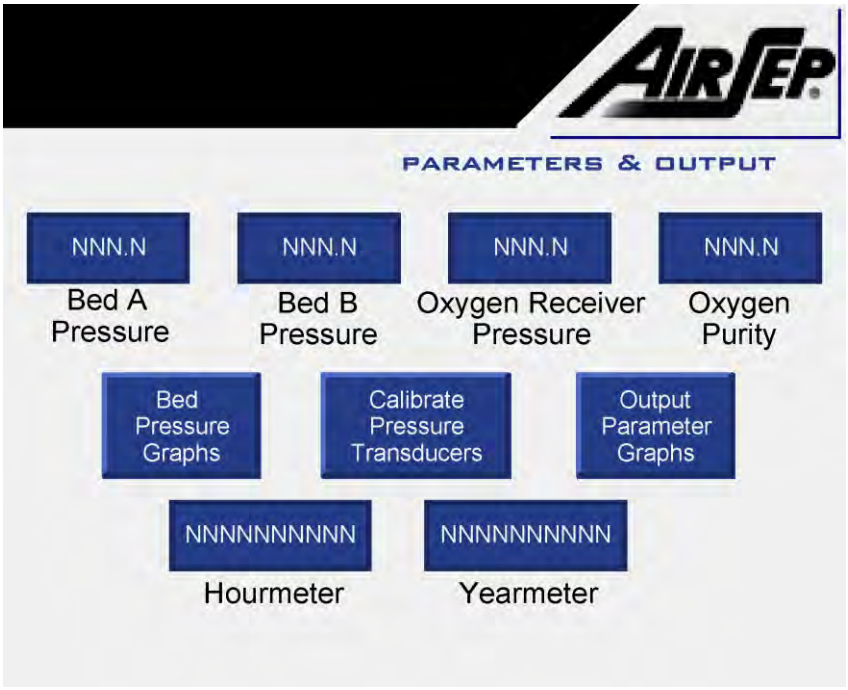

Figure 4.6: Typical Parameters and Output Screen

The 'Bed Pressure Graphs' icon takes to the Bed Pressure Graphs Screen as shown.

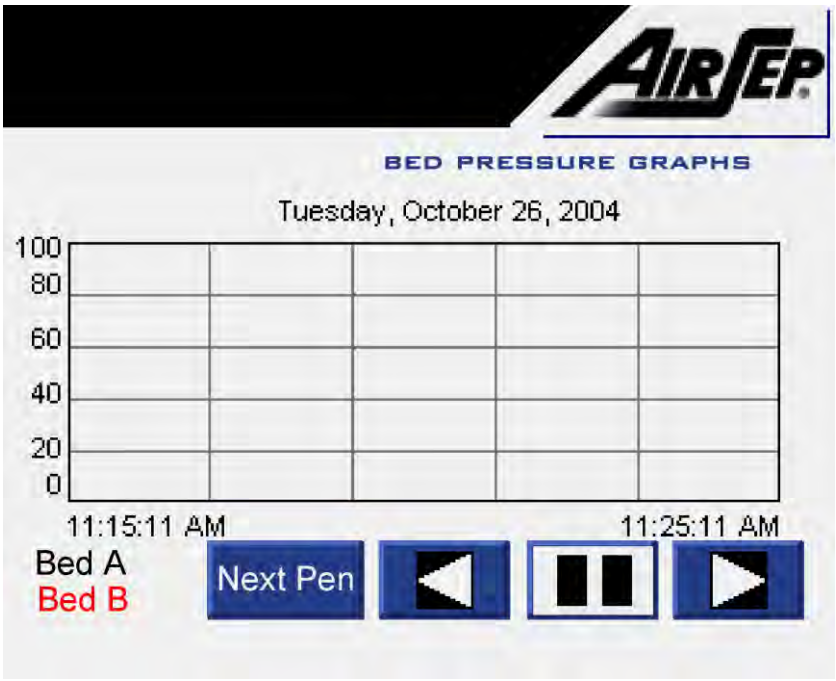

Figure 4.7: Typical Bed Pressure Graphs Screen

The 'Output Parameter Graphs' icon takes to the screen that displays the graphs between oxygen pressure Vs time and the oxygen purity Vs time. The 'Next Pen' icon changes the scale of the ordinate to suit the respective displayed pressure.

The 'Calibrate Pressure Transducers' icon displays a screen dedicated to the pressure transducers calibration and settings as shown below.

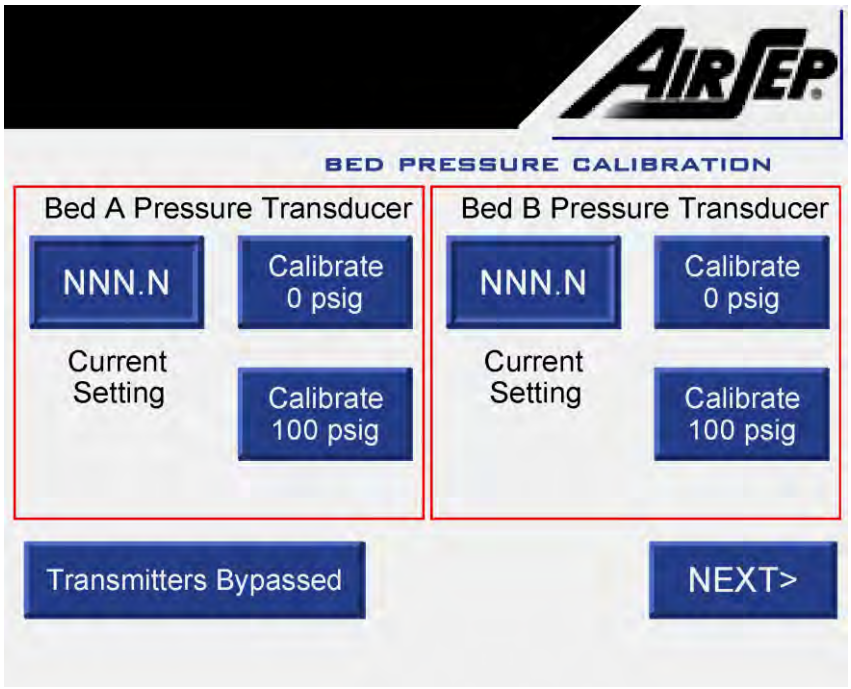

Figure 4.8: Typical Bed Pressure Calibration Screen

The pressure transducers for the beds and the product oxygen pressure are factory calibrated and should not require any calibration for a long period. However, if the need arises, follow the procedure below for calibration.

1. To calibrate pressure transducer, press the 'BYPASS TRANSMITTERS' icon on the screen to bypass the pressure transmitter signals to the PLC. The text of the icon will change to 'TRANSMITTERS BYPASSED' as shown in Figure 4.8.
2. The three-way valve (V-A) (Figure 4.9) handle shows the direction of flow path. In Figure 4.9, direction of flow path is from oxygen generator to pressure transducer. Close this manual three-way valve (V-A), so that the flow path is from the atmosphere to the pressure transducer.
3. Take out the plug, if any, from the port A (Figure 4.9) and attach a manual air pump having an accurate pressure gauge.

4. Press the ‘Calibrate 0 psig’ icon when the gauge on the manual air pump reads 0 psig.
5. Manually pump the air so that the pressure reading on the gauge is 100 psig.
6. At this point, press the ‘Calibrate 100 psig’ icon on the calibration screen to finish the calibration procedure.

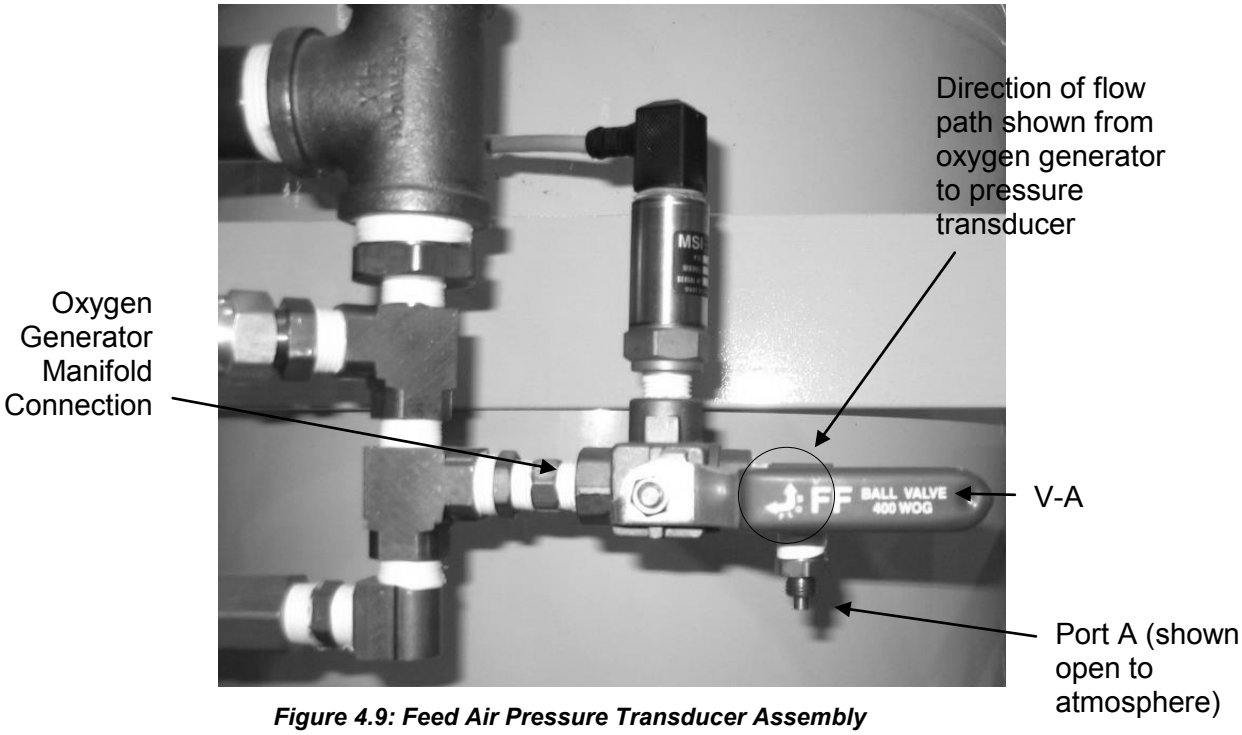

Figure 4.9: Feed Air Pressure Transducer Assembly

7. Disconnect the manual air pump from the port A and put the plug, if any, back to the port A.
8. Open the manual three-way valve (V-A), so that the flow path is from the oxygen generator to the pressure transducer as shown in Figure 4.9.
9. Press the ‘TRANSMITTERS BYPASSED’ icon to reactivate the signals of pressure transducers.

Press the ‘NEXT’ icon to navigate the calibration screen for the oxygen receiver pressure transducer.

> **NOTE**
>
> If ‘BYPASS TRANSMITTERS’ icon is pressed, it will bypass the transmitter for 10 minutes and then it resets itself. However, it also acts as a toggle icon and if pressed again before the expiry of 10 minute time period, the icon resets.

4.4 Control Panel: Internal Components

The internal layout of the control panel mainly consists of programmable logic controller (PLC), oxygen purity board (optional), HMI, circuit breakers, transformers, and an alarm horn.

Programmable Logic Controller

The programmable logic controller (PLC) contains the logic for the oxygen generator operation.

Oxygen Purity Monitoring Board

This board monitors the purity of the product oxygen. A sample of product oxygen flows from the oxygen receiver to this board through a regulator. Ensure that the regulator is set for ~6 psig for accurate readings. Refer to Figure 4.1 for the location of the regulator.

Human Machine Interface (HMI)

The HMI acts as an interface between the operator and the oxygen generator.

4.5 Accessory Kits

The items discussed in this section are supplied as ordered. Please contact an AirSep Corporation sales representative for information about AS-N and AS-P accessory kits.

A starter kit is available for each oxygen generator. The table below contains a list of items in the starter kits.

Model	Item
AS-D+	Air Hose (3/8” x 10’ LG.) Oxygen Hose (#6 x 10’ LG.) Regulator Kit Magnalube-G Regulator Support Bracket Oxygen Purity Board Sample Line* Conduit for Low Purity Shut-Off Valve*
AS-E	Air Hose (1/2” x 10’ LG.) Oxygen Hose (#8 x 10’ LG.) Regulator Kit Magnalube-G Regulator Support Bracket Oxygen Purity Board Sample Line* Conduit for Low Purity Shut-Off Valve*
AS-G, AS-J	Air Hose (1” x 10’ LG.) Oxygen Hose (#12 x 10’ LG.)

	Regulator Kit Magnalube-G Regulator Support Bracket Oxygen Purity Board Sample Line* Conduit for Low Purity Shut-Off Valve*
AS-K, AS-L	Air Hose (1" x 10' LG.) Oxygen Hose (#16 x 10' LG.) Regulator Kit Magnalube-G Regulator Support Bracket Oxygen Purity Board Sample Line* Conduit for Low Purity Shut-Off Valve*

Table 4.1: Description of the Parts included in the Starter Kits

*Item supplied based on type of starter kit ordered.

Please contact an AirSep Corporation sales representative to order the starter kits. Below is a brief description of items included in the starter kits.

Air Hose

Red color rubber hose supplied for the inlet connection of the oxygen generator.

Oxygen Hose

Stainless steel braided hose supplied for the outlet connection of the oxygen generator.

Regulator Kit/Assembly

This assembly contains the following items:

- Pressure Regulator for Product Oxygen
- Bacteria Filter*
- Pressure Gauge
- Vent Valve with Muffler (Helps purge low purity oxygen during initial start-up. Please refer to chapter 6 for details)
- Oxygen Purity Sample Port*
- Low Purity Shut-Off Valve*

* Items supplied based on the type of regulator kit ordered.

This assembly should be mounted at the outlet of the oxygen receiver.

Magnalube-G

Grease for lubricating the feed air regulator

Regulator Support Bracket

As the name suggests, regulator support bracket is used to support the pressure regulator assembly for the product oxygen.

In addition to the starter kits, few other accessories are also available. These are listed below.

Model	Item
AS-D+	Hose Assembly from air compressor to air receiver (1/2" MPT) Hose for Oxygen Service #6, 1/4" MPT connections Air Receiver (120 VAC ~ ±10%) Air Receiver (220 VAC ~ ±10%) Oxygen Receiver Manual Backup Switchover
AS-E	Hose Assembly from air compressor to air receiver (1/2" MPT) Hose for Oxygen Service #8, 3/8" MPT connections Air Receiver (120 VAC ~ ±10%) Air Receiver (220 VAC ~ ±10%) Oxygen Receiver Manual Backup Switchover
AS-G, AS-J	Hose Assembly from air compressor to air receiver (3/4" MPT) Hose for Oxygen Service #12, 3/4" MPT connections Air Receiver (120 VAC ~ ±10%) Air Receiver (220 VAC ~ ±10%) Oxygen Receiver Manual Backup Switchover
AS-K	Hose Assembly from air compressor to air receiver (1-1/2" MPT) Hose for Oxygen Service #16, 1" MPT connections Air Receiver (120 VAC ~ ±10%) Air Receiver (220 VAC ~ ±10%) Oxygen Receiver
AS-L	Hose Assembly from air compressor to air receiver (2" MPT) Hose for Oxygen Service #16, 1" MPT connections Air Receiver (120 VAC ~ ±10%) Air Receiver (220 VAC ~ ±10%) Oxygen Receiver

Table 4.2: Additional Available Accessories

Please contact an AirSep Corporation sales representative for ordering information. Refer to chapter 8 for contact information.

5.0 Installation

5.1 Handling and Unpacking

AirSep Corporation ships the oxygen generator on a covered skid. The skid also includes an accessory box (only in AS-D+ through AS-L Models) containing all the accessories for the unit and an instruction manual needed to install the unit properly. The oxygen receiver, if supplied, is shipped on a separate skid.

To unpack the oxygen generator, follow these guidelines:

1) Inspect the shipping container and open it immediately upon receipt.

2) If the exterior packaging is severely damaged, note it on the freight bill before you sign it.

You must submit a damage claim **within 24 hours of receipt**. In the case of concealed or hidden damage, a claim must be filed **within 15 days of receipt**. Only the consignee can file a claim. The AirSep Product Warranty does **not** cover shipping damage.

3) Unpack the unit and remove any protective wrapping and packaging. Retain the carton and packaging to facilitate the future shipping and transporting of the unit.

4) Place the unit in an upright position and thoroughly inspect the enclosure and all the external components (e.g., control panel) for damage.

5) Open the control panel and inspect the interior for loose or damaged parts.

To prevent electrical shock, make sure the main power supply is disconnected when you remove the enclosure, inspect the internal components, and install the oxygen generator and oxygen receiver.

6) Inspect all the wiring to ensure that no wires are broken and no push-on connector is off its terminal. If a wire is disconnected, reconnect the wire according to the electrical schematic.

7) After inspecting the interior, close the control panel on the unit.

8) Locate the instruction manual inside the accessory box. Read the entire manual before installing and operating the unit.

5.2 Pre-installation Guidelines

Before you install the oxygen generator and the oxygen receiver, if supplied, refer to the Specifications section in the Appendix of this instruction manual to determine the applicable floor space, feed air, and the power requirements for your particular model.

The oxygen generator may use feed air at specifications outside those shown in the Appendix of this instruction manual; however, use of such feed air may require modification of the oxygen generator at the AirSep Corporation factory to ensure the product oxygen meets the specifications. Consult your sales representative to determine whether your oxygen generator requires modifications for your application.

Locate the oxygen generator in an area where the ambient air temperature remains between 4°C (40°F) and 44°C (112°F) to prevent damage not covered under the AirSep Corporation Product Warranty.

To prevent fire or electrical shock, locate the oxygen generator away from rain or any other type of moisture.

Make sure the area that surrounds the oxygen generator is well ventilated, and provide sufficient space around the unit (at least one meter (three feet)) to allow for cool air flow as well as to allow safe operation and maintenance.

AirSep oxygen generators are sold for use in industrial applications only. Contact AirSep Corporation, or an authorized AirSep representative, before you use this unit for any medical application.

	Do not disconnect protective earth:	

5.3 Installation Instructions

Refer to Figure 5-1 below for the recommended installation arrangement for the oxygen generator.

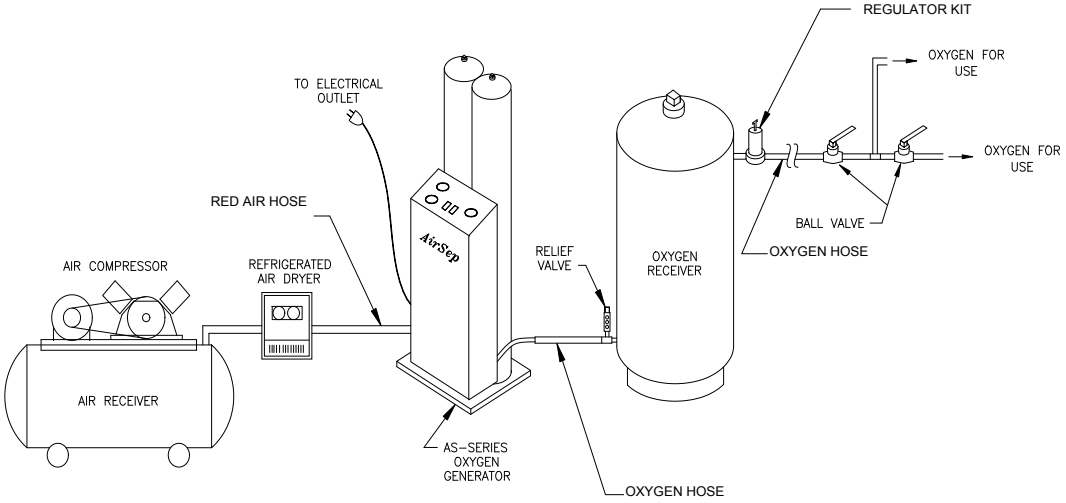

Figure 5.1: Typical Installation Arrangement

1) Connect the red air hose provided with the oxygen generator accessories, if ordered, from the on-site air supply to the feed air inlet connection on the oxygen generator. Refer to the Table 5-1 to determine the proper size for the feed air inlet connection and feed air hose for your model.

Series	Feed Air Inlet Connection Size	Feed Air Hose Size
AS-A,AS-B	¼" NPT female bulkhead fitting with a ¼" NPT male x ¼" NPSM ball-end joint adapter	¼" ID minimum
AS-D	¼" NPT female bulkhead fitting with a ¼" NPT male x ⅜" NPSM ball-end joint adapter	⅜" ID minimum
AS-D+	3/8" NPT Female fitting	3/8" ID minimum
AS-E	½" NPT Female fitting	½" ID minimum
AS-G,AS-J,AS-K	¾" NPT Female fitting	¾" ID minimum
AS-L	1" NPT Female fitting	1" ID minimum
AS-N,AS-P	1-1/2" NPT Female fitting	1-1/2" ID minimum

Table 5-1 Feed Air Connection Sizes and Hose Sizes

2) Install your oxygen receiver. If AirSep Corporation provided your oxygen receiver; assemble the receiver as follows (if not assembled):

   a) Connect the relief valve assembly to the oxygen inlet port on the oxygen receiver. Tighten the connection fully.

   b) Connect the regulator kit at the oxygen outlet port on the oxygen receiver. Refer to Figure A.2 for the location of regulator kit installation. Tighten the connection fully.

Use Teflon™ tape to seal the threaded connections on the oxygen receiver. If AirSep Corporation provided your oxygen receiver, the threaded connections in the accessory kit were shipped with Teflon™ tape wrapping already applied.

If AirSep Corporation did not provide your oxygen receiver, make sure your oxygen receiver is sized properly to meet the requirements of your oxygen generator model. In addition, AirSep Corporation recommends that the oxygen inlet on the oxygen receiver contain a relief valve and that the oxygen outlet on the oxygen receiver contain a pressure regulator and pressure gauge or a manual ball valve and pressure gauge.

3) Connect the oxygen clean hose provided with the oxygen generator accessories from the oxygen outlet connection on the oxygen generator to the relief valve assembly at the oxygen inlet port on the oxygen receiver. Refer to the following table to determine the proper size for the oxygen outlet connection. If AirSep Corporation did not provide the hose then ensure that the hose used is properly sized and is compatible for use with oxygen.

Series	Oxygen Outlet Connection Size
AS-A, AS-B, AS-D	¼" NPT female bulkhead fitting with a ¼" NPT male x B size oxygen adapter
AS-D+	¼" NPT Female fitting
AS-E, AS-G, AS-J	⅜" NPT Female fitting
AS-K, AS-L	¾" NPT Female fitting
AS-N, AS-P	¾" NPT Female fitting

Table 5-2 Oxygen Outlet Connection Sizes

Make sure the condensate outlet is not obstructed. This may require a daily drain system check.

4) Connect the power cord to a grounded electrical outlet.

Provide proper voltage from a grounded outlet to the oxygen generator. Improper voltage causes damage not covered under the AirSep Corporation Product Warranty.

The oxygen generator is now ready for operation. Refer to Chapter 6 of this instruction manual before you operate the oxygen generator.

6.0 Operation

When you complete installation as described in the previous section, the oxygen generator is ready for easy start-up and operation. This section of this instruction manual provides the procedures for start-up and shutdown of the oxygen generator. Before you start the oxygen generator, read and thoroughly understand any literature or instruction manuals for the air compressor that will provide the feed air to the oxygen generator.

6.1 Initial Start-up

To start the oxygen generator for the first time or after an extended or unexpected shutdown, follow the steps below:

1) Connect the grounded power cord to a grounded electrical outlet. Make sure the power circuit cannot be turned off accidentally.

If the power is turned off unexpectedly, the unit will stop cycling. If your application is using oxygen when the power is off, the oxygen receiver will depressurize.

2) Fully close the manual feed #2 valve (V-2).

3) Provide feed air to the oxygen generator that meets the specification for your model.

4) If the oxygen purity monitoring board is provided, ensure that all the manual valves on the oxygen sample line are open and the pressure regulator at the inlet of the purity monitoring board (refer to Figure 4.1) is set at ~5-6 psig. If the oxygen receiver does not have enough pressure to set the pressure regulator, this step can be performed after step 11. The oxygen sample is typically taken from the oxygen receiver.

5) Press the 'ALARM RESET' icon on the Oxygen Generator Control Screen (if visible). The generator will only start if there no shutdown condition exists. However, during start-up, a low purity alarm may exist. If a shutdown condition exists, pressing the 'ALARM RESET' will not reset the system. The 'ALARM RESET' icon disappears once all the alarm and shutdown conditions have been rectified.

   Please note that during initial start-up or start-up after a long period, the oxygen purity can be lower than the low purity alarm and/or shutdown setpoint and a 'low purity' alarm may exist. However, the oxygen generator ignores the oxygen purity shutdown setpoint for the first 60 minutes after start-up. If the oxygen purity after 60 minutes of

operation is still below the low purity shutdown setpoint, the oxygen generator shuts down.

The low purity shut-off valve (if installed on the oxygen receiver) will only open when the oxygen purity is above the shutdown set point to allow the product oxygen to flow to your application. This valve assembly comes as an optional feature with the oxygen generator.

6) Set the AUTO/MAN icon on the 'Oxygen Generator Screen' to manual mode.

7) Press the 'START' icon on the 'Main System Control Screen'.

8) Slowly open the manual feed #2 valve (V-2) until it is open completely.

9) Close the manual product valve (V-3) (refer to Figure 4.2 for location of valve). The manual product valve on these units has been configured to enable a predetermined amount of flow through the valve when closed. This allows the product pressure to build up even when the valve is closed.

10) Press the manual drain button and make sure the exhaust from the filter drain does not contain water or oil. If the exhaust contains water or oil, press and hold the manual drain button on the control panel until the exhaust no longer contains liquid.

While venting oxygen, do not allow smoking or open flame. Do not allow venting oxygen to come in contact with clothing or hydrocarbon-based materials.

11) Allow the oxygen generator to operate until the oxygen receiver pressure on the 'Parameters and Output' screen (Figure 4.8) registers approximately 276-310 kPa (40-45 psig) and then fully open the manual product valve (V-3).

12) To purge oxygen at less than design purity from the oxygen receiver, open the manual vent valve on the oxygen receiver to vent gas while the oxygen generator is running in manual mode. Manual valve should be open slightly so that pressure will still build up in the oxygen receiver tank.

13) Allow the oxygen generator to operate until the designed purity level is reached. Fully close the manual vent valve if the low purity oxygen gas no longer discharges from the receiver.

14) Set the AUTO/MANUAL icon on the 'Oxygen Generator' screen to auto mode.

15) Observe the oxygen receiver pressure on the 'Parameters and Output' screen (Figure 4.6). When the pressure in the oxygen receiver increases to approximately the auto-standby upper setpoint pressure, the oxygen generator runs for five more cycles (approx. 15 min.) and then enters standby. When delivery of product oxygen reduces the pressure in the

oxygen receiver below auto standby lower setpoint pressure, the oxygen generator begins to cycle.

16) After the oxygen receiver pressurizes and the oxygen generator enters the standby mode, the generator is ready to deliver oxygen to your application. When using the product oxygen, adjust the pressure regulator at the outlet of the oxygen receiver until the pressure of the product oxygen meets the needs of your application.

6.2 Operation

The oxygen generator can be operated in auto or manual mode depending on the requirements of your application. To use product oxygen that meets the specifications for your model listed in the Appendix A of this instruction manual, set the AUTO/MANUAL icon on the 'Oxygen Generator Screen' to AUTO to produce oxygen only during times of the oxygen demand.

6.3 Shutdown

1) Stop the flow of product oxygen from the oxygen receiver to your application by fully closing all manual valves between the outlet of the oxygen receiver and the inlet to your application.

2) Make sure the AUTO/MANUAL icon on the HMI is set to AUTO.

3) Allow the oxygen receiver to repressurize fully. When the oxygen receiver repressurizes, after a time delay of five cycles (approx. 15 min.), the oxygen generator stops cycling and enters the standby mode.

Allow the oxygen generator to enter standby during shutdown to ensure that the oxygen receiver contains oxygen at design purity during the subsequent restart and also ensure that the unit shuts down at the proper point in the cycle. Failure to wait until the oxygen generator enters standby results in temporarily reduced purity oxygen during the subsequent restart.

4) Press the STOP icon on the 'Main System Control Screen' or switch off the remote on/off switch depending on the mode of the oxygen generator to stop it.

5) Close the manual valve for the oxygen sample to the oxygen purity monitoring board.

6.4 Extended Shutdown

To shut down the oxygen generator for 24 hours or longer, complete all the steps in Section 6.3 — Shutdown. In addition, perform the following steps:

1) Fully close all manual valves on the oxygen receiver to isolate the oxygen in the oxygen receiver, to prevent the loss of pressure in the oxygen receiver and enable a normal start-up.

2) Disconnect the power supply.

6.5 Start-up after an Extended Shutdown

After an extended shutdown or an unexpected shutdown, such as a loss of electrical power, you must purge the oxygen receiver of any low purity oxygen before the oxygen generator can supply oxygen within purity specifications. To purge the oxygen receiver, follow all the steps in Section 6.1 — Initial Start-Up.

Using the oxygen generator at flows higher than 15% above those specified in Appendix A of this manual, will result in the likely contamination of the molecular sieve beds. This damage is not covered under the standard warranty.

7.0 Maintenance

The most important maintenance you can perform on the oxygen generator is to make sure the automatic drain valve for the filters functions properly. Routinely monitor the operation of this drain valve to ensure the long life of the oxygen generator. Follow the procedures described in this section of the instruction manual for daily, semi-annual, and annual maintenance. It should be noted that a few procedural steps in the sub-sections may apply to a specific model.

Use the following chart as a guide to perform maintenance on a regular schedule:

Time Period	Action
Daily	Make sure automatic drain functions properly.
Monthly	Inspect filters and bowls. Clean bowls or replace filters as necessary.
Six Months	Replace particulate filter element.
Annually	Replace coalescing filter element.
	Check performance of automatic valves and actuators.
	Clean and lubricate feed air regulator.

Table 7-1 Maintenance Chart

7.1 Daily Monitoring

1) Make sure the condensate outlet and tubing for the drain valve is not obstructed. Condensate should discharge from this outlet or tubing for approximately three to five seconds every 10 minutes when the oxygen generator is running.

2) Press the MANUAL DRAIN button on the control panel and observe the discharge. The discharge should flow freely and be clear of oil and water within five seconds.

7.2 Monthly Monitoring

Monthly monitoring requires inspection of the filters and testing the performance of the automatic drain valve. To perform this procedure, depressurize the unit and remove the filter bowls as described in the following procedures. (See Section 7.3, Depressurizing the Filters, and Section 7.4, Changing Filter Elements.) When the filter bowls have been removed and cleaned, perform the following steps:

1) Inspect the filter element(s). Replace any element(s) that appear damaged or excessively dirty.

2) Reconnect the drain tubing to the bottom of the bowls.

3) Add approximately two ounces of water to the filter bowls.

4) Re-install the filter bowls, making sure the bowls lock firmly into place.

5) Slowly open fully the manual inlet valve to pressurize the filter bowls.

6) While observing the drain tubing, press the 'START' icon on the 'Main System Control Screen' and determine whether the automatic drain valve discharges moisture.

7) Fully close the manual inlet valve and depressurize the unit as described below. (See Section 7.3, Depressurizing the Filters.)

8) Remove the filter bowls as described below. (See Section 7.4, Changing Filter Elements.) Observe whether the water drained from the bowls.

   If the filter bowls still contain water, refer to the troubleshooting chapter of this instruction manual. If the bowls do not contain water, re-install the bowls and re-pressurize the system. (See Section 7.4, Changing Filter Elements.)

7.3 Depressurizing the Filters

The oxygen generator filters contain pressurized air. To perform monthly maintenance or change filter elements safely, fully depressurize the filter assembly as described in the procedure in this section. To safely depressurize all oxygen generator components, refer to the procedure described later in this chapter. (See Section 7.5, Depressurizing the Oxygen Generator.)

1) Allow the oxygen generator to stop cycling in auto mode when the oxygen receiver pressurizes fully.

2) Press the 'STOP' icon on the 'Main System Control Screen.'

3) Disconnect the oxygen generator from the power supply.

4) Fully close the manual inlet valve (V-1) and manual filter outlet valve (V-2).

5) Shut off the feed air supply at the air compressor or air header.

6) Reconnect the oxygen generator to the power supply.

7) Press the MANUAL DRAIN button on the HMI until the air no longer exits from the drain tubing.

If the pressure gauge does not decrease to zero, shut down the unit and call the AirSep Corporation Commercial Products Division.

7.4 Changing Filter Elements

The time period to change the filter element depends upon the feed air conditions. If the feed air is highly contaminated with dust, oil, etc., the filter element must be changed more frequently than the specified time interval in the manual.

The following procedure describes how to change the filter elements for either the particulate filter semi-annually or the coalescing filter annually.

1) Shut down the oxygen generator and depressurize the filters. (See Section 7.3, Depressurizing the Filters.)

Do not attempt to remove the filter bowls until the filter assembly fully depressurizes as described in Section 7.3.

2) To remove the bowl from either filter, push down the bowl latch and rotate the bowl slightly right or left while pulling down on the bowl. If filter has screws, loosen them up.
3) When the bowl is free, disconnect the drain tubing from the bottom of the bowl. There may be a retainer nut which has to be disconnected to remove the filter element for the filter models with screws.
4) Wash the bowl in warm, soapy water, and then rinse the bowl.
5) Gently unscrew the old filter element and discard it.
6) If you are replacing a coalescing filter element, remove and discard the black gasket where the top of the filter element connects to the filter housing.
7) If you are replacing a coalescing filter element, make sure a black gasket is attached to the top of the new element.
8) Taking care not to touch the filter portion of the new filter element, screw it into the position from which the old filter was removed.
9) Reconnect the drain tubing to the bottom of the bowl.
10) Re-install the filter bowl, making sure the bowl locks firmly into place.
11) Slowly open fully the manual inlet valve and manual filter outlet valve.
12) Turn on the feed air at the air compressor or air header.
13) Connect the oxygen generator to the power supply.

7.5 Depressurizing the Oxygen Generator

The oxygen generator operates with pressurized air and oxygen. To perform maintenance on the unit safely, fully depressurize the oxygen generator components as described in the procedure in this section.

1) Shut down the oxygen generator and disconnect the power supply. (See Section 6.3 – Shutdown.)
2) Fully close the manual feed # 2 valve (V-2) and the manual product valve (V-3).
3) Connect the oxygen generator to the power supply.
4) Press the 'START' icon on the 'Main System Control Screen'
5) Set the oxygen generator to manual mode.
6) Allow the unit to operate until gas no longer exhausts from the muffler and 'Parameters and Output Screen' indicate approx. zero pressure.

To fully depressurize the oxygen generator components, follow the steps 2-7 to depressurize the filter assembly as described in section 7.3.

If the pressure gauges do not decrease to zero, shut down the unit and call the AirSep Corporation Commercial Products Division.

7) If the unit is depressurized, power down the unit if required and proceed to perform the maintenance.

7.6 Adjusting the Feed Air Regulator

The feed air regulator may require re-adjustment after any maintenance is performed. Please ensure that the feed air regulator setting is not changed during re-adjustment.

NOTE	Setting the Feed air regulator to a value such that the maximum oxygen generator bed pressure is 80 psig or more can cause severe damage to the molecular sieve in the adsorbers which will not be covered under AirSep's warranty.

If the feed air regulator requires adjustment, perform the following procedure:

1) Unlock the lock nut on the adjustment knob.

2) To increase feed air pressure, rotate the knob clockwise. To decrease feed air pressure, rotate the knob counterclockwise.

NOTE	The numbers on the dial of the feed air regulator do not always directly correspond to the actual cycle/bed pressure in the system. Check on the 'Parameters and Output Screen' for the max. bed pressures.
NOTE	Make slight adjustments and allow the unit to run through at least one cycle before making another adjustment. If pressure readings remain incorrect after the cycle completes, continue making slight adjustments and cycling the unit until the pressure is within the specifications.

8.0 Troubleshooting

8.1 Technical Support

For assistance in troubleshooting or repairing the unit, or to order replacement parts, contact the AirSep Commercial Products Service Department by telephone Monday through Friday between 7:30 a.m. and 4:30 p.m. Eastern Time. In the USA or Canada, call **1-800-320-0303**. Outside the USA or Canada, call **(716) 691-0202**. Send fax inquiries anytime to **(716) 691-1255**. Address written inquiries to:

AirSep Corporation
260 Creekside Drive
Buffalo
NY 14228-2075 USA
Attention: Commercial Products Service Department

E-mail: cpdservice@airsep.com

Visit **www.airsep.com** to know about our complete range of standard Oxygen Generators.

8.2 Troubleshooting Chart

Use the following chart as a guide to troubleshoot the oxygen generator.

Problem	Probable Cause	Solution
Oxygen generator does not cycle.	No electrical power to control cabinet.	Make sure unit is plugged into wall outlet and that wall outlet receives power.
	Circuit breaker tripped.	Reset the breaker.
	Generator is not switched on	Switch on the oxygen generator
	Oxygen Generator is in Standby mode.	The oxygen generator will start running once the pressure in the oxygen receiver goes below the low setpoint for standby mode.
Oxygen generator operates continuously. Pressure of oxygen at specified purity is lower than the specified pressure.	Inadequate feed air pressure.	Make sure feed air valves remain fully open and lines are not obstructed.
	Inadequate cycle pressure.	Adjust or replace feed air regulator.

	Oxygen demand exceeds oxygen generator capacity.	Check oxygen usage or check unit and oxygen hoses and piping for leaks.
Oxygen purity below specified purity (50–70%).	Oxygen Sample flow line obstructed	Ensure that all the valves on the oxygen sample line to the purity monitoring board are open.
		Ensure that the oxygen regulator on the oxygen sample line is set at ~6 psig.
	Low purity oxygen during initial start-up.	Start unit as described in Chapter 6.
	Unit shut down for extended period—no pressure in oxygen system.	Start unit as described in Chapter 6.
	Momentary power loss.	Vent low purity oxygen from system as described in Chapter 6.
	Inadequate feed air.	Check air lines for obstructions or adjust or replace feed air regulator.
	Valves not cycling properly.	Replace or rebuild the valves as necessary.
	Oxygen purity monitoring board defective	Replace the oxygen purity monitoring board
	Improperly wired PLC.	Check the wiring or replace PLC.
	Solenoid valve not functioning properly. Check for the following causes:	
	Defective coil.	Replace coil.
	Loose or defective wire to valve.	Repair or replace wire.
	Defective PLC. (No power output to valve.)	Replace PLC.
	Valve remains energized and open.	Check the valve or the PLC output LED.
	Defective valve.	Rebuild valve.
	Worn internal parts on valve.	Rebuild valve.
Valve makes loud “chattering” noise.	Low voltage.	Check power supply.
	Low voltage PLC output.	Replace PLC.
	Dirty valve.	Clean or rebuild valve.
	Worn valve core.	Rebuild valve.
	Defective EMI filter.	Replace EMI filter.

Very low purity oxygen output (21–50%).	Oxygen Sample flow line obstructed	Ensure that all the valves on the oxygen sample line to the purity monitoring board are open.
		Ensure that the oxygen regulator on the oxygen sample line is set at ~6 psig.
	Leaking check valves.	Clean or replace check valves.
	Plugged muffler.	Replace muffler.
	Oxygen purity monitoring board defective	Replace the oxygen purity monitoring board
Oxygen generator outputs particulates (dusting).	Feed air regulator set improperly set.	Adjust feed air regulator.
	Contaminated molecular sieve in adsorbers.	Contaminated molecular sieve in adsorbers.
	System not cycling properly.	Check and repair or replace faulty wiring and/or PLC.
Feed air regulator leaks out bleed orifice.	Stuck feed air regulator main valve assembly.	Clean and lubricate main regulator valve assembly.
	Defective main valve assembly seat.	Rebuild or replace regulator.
Oxygen generator relief valves open.	Cycle pressure exceeds the maximum pressure specified.	Adjust feed air regulator.
	Stuck feed air regulator main valve assembly.	Rebuild or replace regulator.
	Defective relief valve.	Replace relief valve.
Filter drain valve remains open. (Valve not energized.)	Valve obstructed.	Clean or replace valve.
Filter drain valve does not energize.	Loose or defective wire to valve.	Repair or replace wire.
	Defective valve coil.	Replace valve.
	Valve core stuck in closed position.	Replace valve.
	Defective PLC. (No power output to valve.)	Replace PLC.
Filter drain valve energizes with unit pressurized, but no air exhausts.	Drain valve obstructed or stuck in closed position.	Clean or replace valve.
	Drain tubing obstructed or pinched.	Clean or replace tubing.

A Appendix Technical Data

Specifications

Data in this section refer to standard AS-D+ through AS-P model oxygen generators. The oxygen generators may use feed air at specifications outside those shown; however, use of such feed air may require modification of the oxygen generators at the AirSep Corporation factory to ensure the product oxygen meets the design specifications. Consult your sales representative to determine whether your oxygen generator requires modifications for your application.

	AS-D+
Oxygen output:	80-100 SCF/hr*
Oxygen Delivery Pressure:	65 psig (max) 448 kPa (max)
Oxygen purity:	90% (min)
Oxygen dew point:	-73°C -100°F
Dimensions:	22 x 27 x 69 in. (L x W x H) 56 x 69 x 175 cm (L x W x H)
Approximate weight:	529 lb 240 kg
Feed Air Requirements	
Pressure:	90 psig (min) 620 kPa (min)
Temperature:	50°C (max) 122°F (max)
Power requirements**:	120 (± 10%) VAC, 50/60 Hz, Single Phase, 3 Amp 220 (± 10%) VAC, 50/60 Hz, Single Phase, 1 Amp
Pressure Switch Setting***:	Minimum: 65 - 70 psig Maximum: 72 - 75 psig

*SCF (standard cubic foot) gas measured at 1 atmosphere and 70°F.
**Check the label on the control panel for appropriate power supply.
***Data may vary as per the customer's requirements.

	AS-E
Oxygen output:	160-195 SCF/hr*
Oxygen Delivery Pressure:	65 psig (max) 448 kPa (max)
Oxygen purity:	90% (min)
Oxygen dew point:	-73°C -100°F
Dimensions:	27 x 33 x 68 in. (L x W x H) 69 x 84 x 173 cm (L x W x H)
Approximate weight:	721 lb 327 kg
Feed Air Requirements	
Pressure:	90 psig (min) 620 kPa (min)
Temperature:	50°C (max) 122°F (max)
Power requirements**:	120 (± 10%) VAC, 50/60 Hz, Single Phase, 3 Amp 220 (± 10%) VAC, 50/60 Hz, Single Phase, 1 Amp
Pressure Switch Setting***:	Minimum: 65 - 70 psig Maximum: 72 - 75 psig

*SCF (standard cubic foot) gas measured at 1 atmosphere and 70°F.
**Check the label on the control panel for appropriate power supply.
***Data may vary as per the customer's requirements.

AS-G

Oxygen output:	250-320 SCF/hr*
Oxygen Delivery Pressure:	65 psig (max) 448 kPa (max)
Oxygen purity:	90% (min)
Oxygen dew point:	-73°C -100°F
Dimensions:	29 x 36 x 75 in. (L x W x H) 74 x 91 x 191 cm (L x W x H)
Approximate weight:	952 lb 432 kg
Feed Air Requirements	
Pressure:	90 psig (min) 620 kPa (min)
Temperature:	50°C (max) 122°F (max)
Power requirements**:	120 (± 10%) VAC, 50/60 Hz, Single Phase, 3 Amp 220 (± 10%) VAC, 50/60 Hz, Single Phase, 1 Amp
Pressure Switch Setting***:	Minimum: 65 - 70 psig Maximum: 72 - 75 psig

*SCF (standard cubic foot) gas measured at 1 atmosphere and 70°F.

**Check the label on the control panel for appropriate power supply.

***Data may vary as per the customer's requirements.

	AS-J
Oxygen output:	450-600 SCF/hr*
Oxygen Delivery Pressure:	65 psig (max) 448 kPa (max)
Oxygen purity:	90% (min)
Oxygen dew point:	-73°C -100°F
Dimensions:	34 x 42 x 78 in. (L x W x H) 86 x 107 x 198 cm (L x W x H)
Approximate weight:	1764 lb 800 kg
Feed Air Requirements	
Pressure:	90 psig (min) 620 kPa (min)
Temperature:	50°C (max) 122°F (max)
Power requirements**:	120 (± 10%) VAC, 50/60 Hz, Single Phase, 3 Amp 220 (± 10%) VAC, 50/60 Hz, Single Phase, 1 Amp
Pressure Switch Setting***:	Minimum: 65 - 70 psig Maximum: 72 - 75 psig

*SCF (standard cubic foot) gas measured at 1 atmosphere and 70°F.
**Check the label on the control panel for appropriate power supply.
***Data may vary as per the customer's requirements.

AS-K

Oxygen output:	750-900 SCF/hr*
Oxygen Delivery Pressure:	65 psig (max) 448 kPa (max)
Oxygen purity:	90% (min)
Oxygen dew point:	-73°C -100°F
Dimensions:	38 x 58 x 91 in. (L x W x H) 97 x 147 x 231 cm (L x W x H)
Approximate weight:	2455 lb 1114 kg
Feed Air Requirements	
Pressure:	90 psig (min) 620 kPa (min)
Temperature:	50°C (max) 122°F (max)
Power requirements**:	120 (± 10%) VAC, 50/60 Hz, Single Phase, 3 Amp 220 (± 10%) VAC, 50/60 Hz, Single Phase, 1 Amp
Pressure Switch Setting***:	Minimum: 65 - 70 psig Maximum: 72 - 75 psig

*SCF (standard cubic foot) gas measured at 1 atmosphere and 70°F.

**Check the label on the control panel for appropriate power supply.

***Data may vary as per the customer's requirements.

	AS-L
Oxygen output:	1000-1300 SCF/hr*
Oxygen Delivery Pressure:	65 psig (max) 448 kPa (max)
Oxygen purity:	90% (min)
Oxygen dew point:	-73°C -100°F
Dimensions:	40 x 62 x 100 in. (L x W x H) 102 x 158 x 254 cm (L x W x H)
Approximate weight:	3023 lb 1371 kg
Feed Air Requirements	
Pressure:	90 psig (min) 620 kPa (min)
Temperature:	50°C (max) 122°F (maximum)
Power requirements**:	120 (± 10%) VAC, 50/60 Hz, Single Phase, 3 Amp 220 (± 10%) VAC, 50/60 Hz, Single Phase, 1 Amp
Pressure Switch Setting***:	Minimum: 65 - 70 psig Maximum: 72 - 75 psig

*SCF (standard cubic foot) gas measured at 1 atmosphere and 70°F.

**Check the label on the control panel for appropriate power supply.

***Data may vary as per the customer's requirements.

AS-N

Oxygen output:	1500-1800 SCF/hr*
Oxygen Delivery Pressure:	65 psig (max) 448 kPa (max)
Oxygen purity:	90% (min)
Oxygen dew point:	-73°C -100°F
Dimensions:	48 x 84 x 110 in. (L x W x H) 122 x 214 x 280 cm (L x W x H)
Approximate weight:	4991 lb 2264 kg
Feed Air Requirements	
Pressure:	90 psig (min) 620 kPa (min)
Temperature:	50°C (max) 122°F (maximum)
Power requirements**:	120 (± 10%) VAC, 50/60 Hz, Single Phase, 3 Amp 220 (± 10%) VAC, 50/60 Hz, Single Phase, 1 Amp
Pressure Switch Setting***:	Minimum: 65 - 70 psig Maximum: 72 - 75 psig

*SCF (standard cubic foot) gas measured at 1 atmosphere and 70°F.

**Check the label on the control panel for appropriate power supply.

***Data may vary as per the customer's requirements.

	AS-P
Oxygen output:	2000-2300 SCF/hr*
Oxygen Delivery Pressure:	65 psig (max) 448 kPa (max)
Oxygen purity:	90% (min)
Oxygen dew point:	-73°C -100°F
Dimensions:	64 x 85 x 111 in. (L x W x H) 163 x 216 x 282 cm (L x W x H)
Approximate weight:	6700 lb 3039 kg
Feed Air Requirements	
Pressure:	90 psig (min) 620 kPa (min)
Temperature:	50°C (max) 122°F (maximum)
Power requirements**:	120 (± 10%) VAC, 50/60 Hz, Single Phase, 3 Amp 220 (± 10%) VAC, 50/60 Hz, Single Phase, 1 Amp
Pressure Switch Setting***:	Minimum: 65 - 70 psig Maximum: 72 - 75 psig

*SCF (standard cubic foot) gas measured at 1 atmosphere and 70°F.

**Check the label on the control panel for appropriate power supply.

***Data may vary as per the customer's requirements.

High bed pressure alarm	83 psig
High bed pressure shutdown	85 psig
Low oxygen purity alarm	89%
Low oxygen purity shutdown setpoint	87%
Time delay for purity shutdown at start-up	1 hour
Cycle pressure/feed air regulator setting	70-75 psig
Oxygen sample line pressure regulator setting	5-6 psig

Table A.1: Typical System Set points

Drawings and Schematics

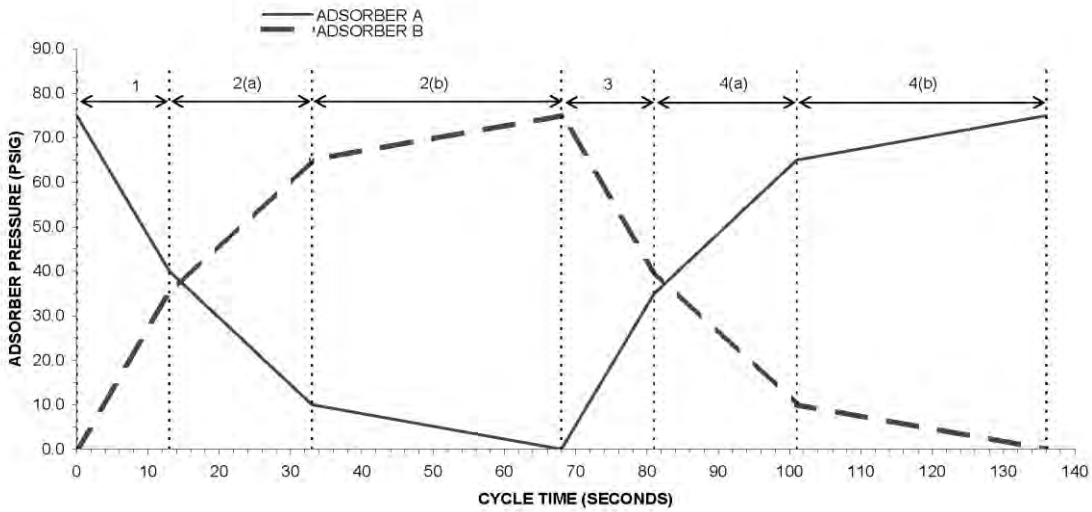

CYCLE	FEED (21%)	BED A	BED B	PRODUCT (90%)	VALVES OPEN	Time (sec)
STEP 1 Equalization A-B		DEP(75→40)*	REP(0→35)		EQ	13
Feed B, Waste A, Purge (a)		DEP(40→10)	REP(35→65)			
STEP 2					FB, WA	68
Feed B, Waste A, Product, Purge (b)		DEP(10→0)	REP(65→75)			
STEP 3 Equalization B-A		REP(0→35)	DEP(75→40)		EQ	81
Feed A, Waste B, Purge (a)		REP(35→65)	DEP(40→10)			
STEP 4					FA, WB	136
Feed A, Waste B, Product, Purge (b)		REP(65→75)	DEP(10→0)			

* Numbers in parenthese indicate typical pressure values in psig
DEP - Depressurization
REP - Re-pressurization

Figure A.1: Typical Pressure Profile and Valves Cycle Sequence

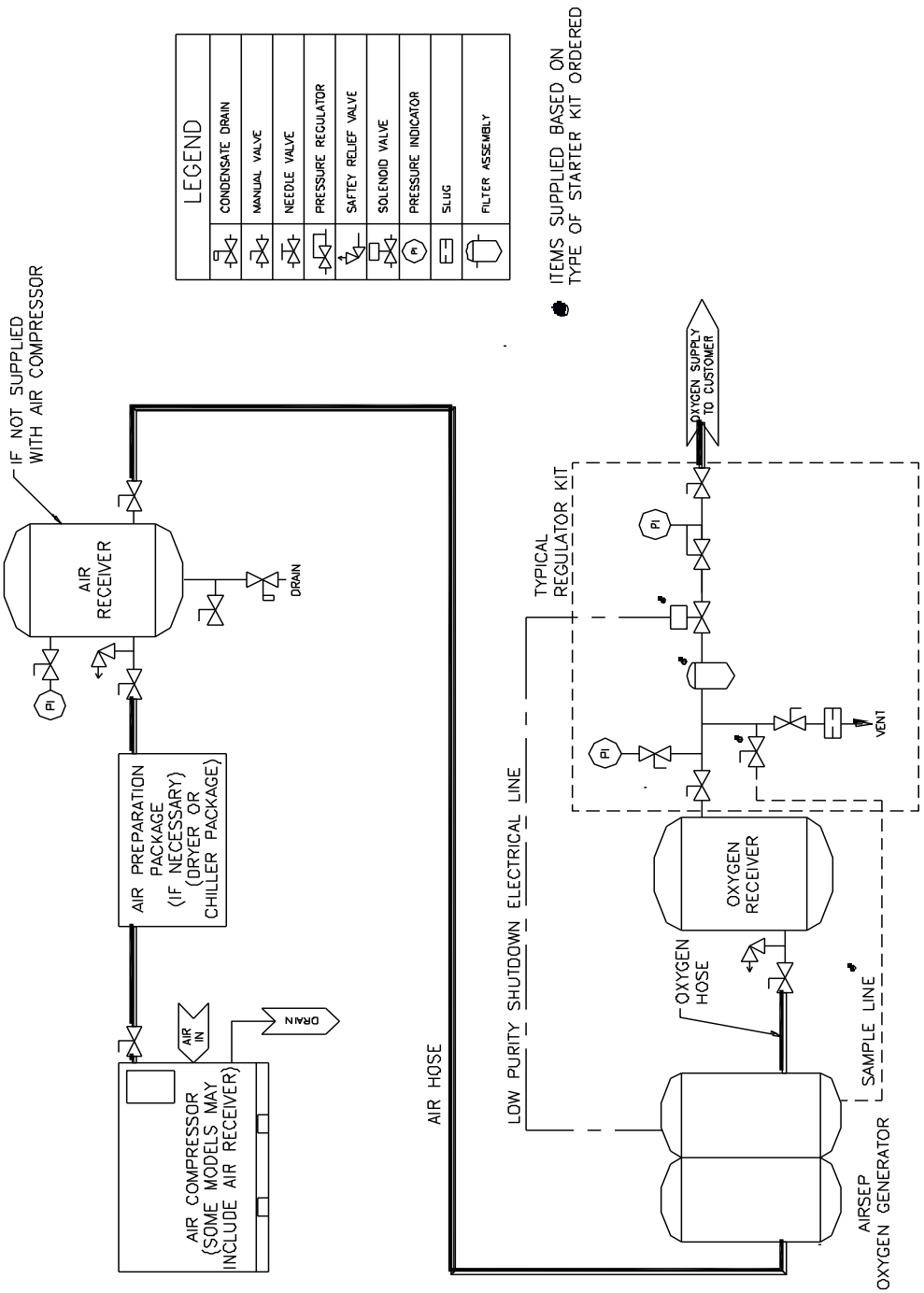

Figure A.2: Typical Installation Arrangement

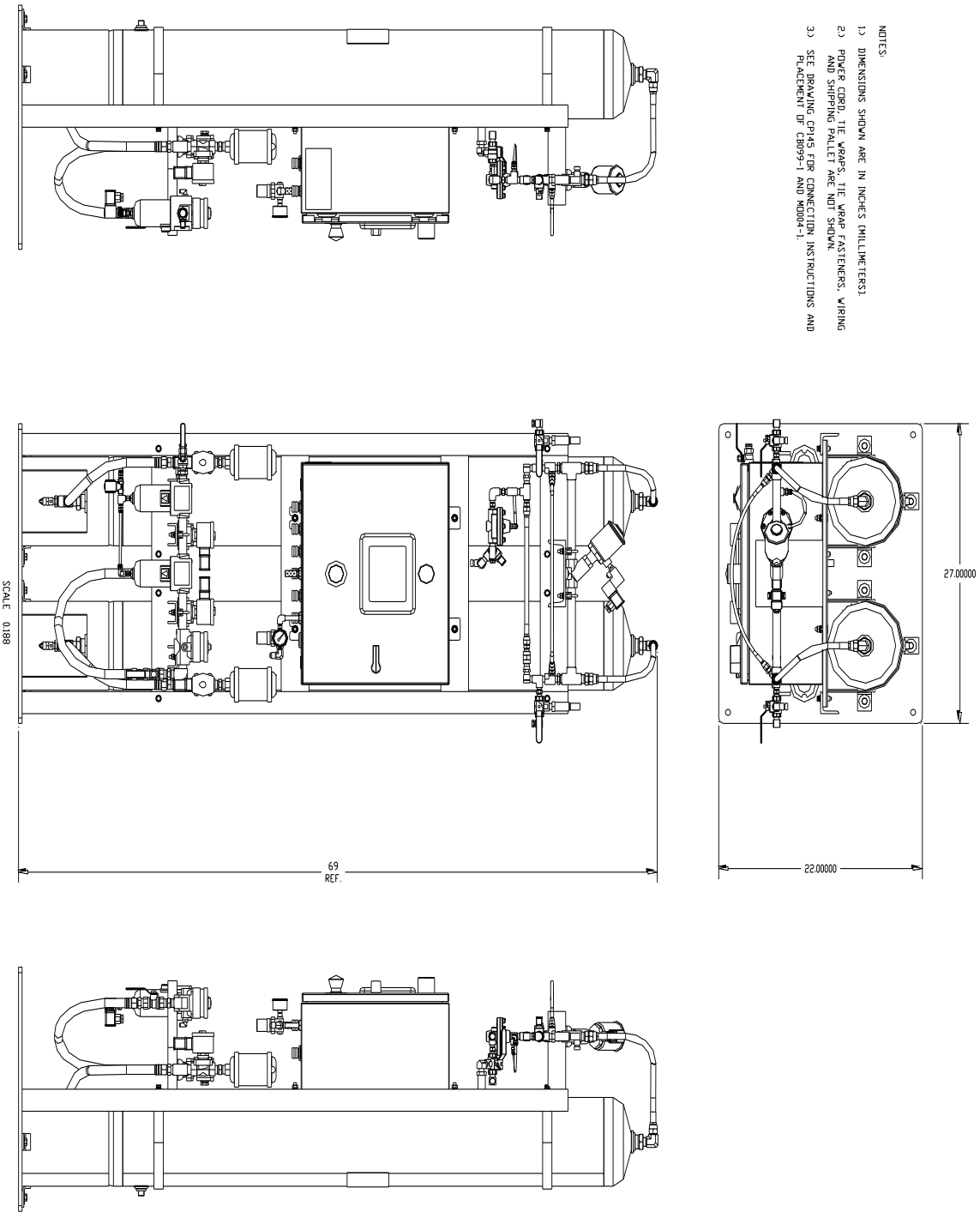

Figure A.3: General Arrangement Drawing – AS-D+

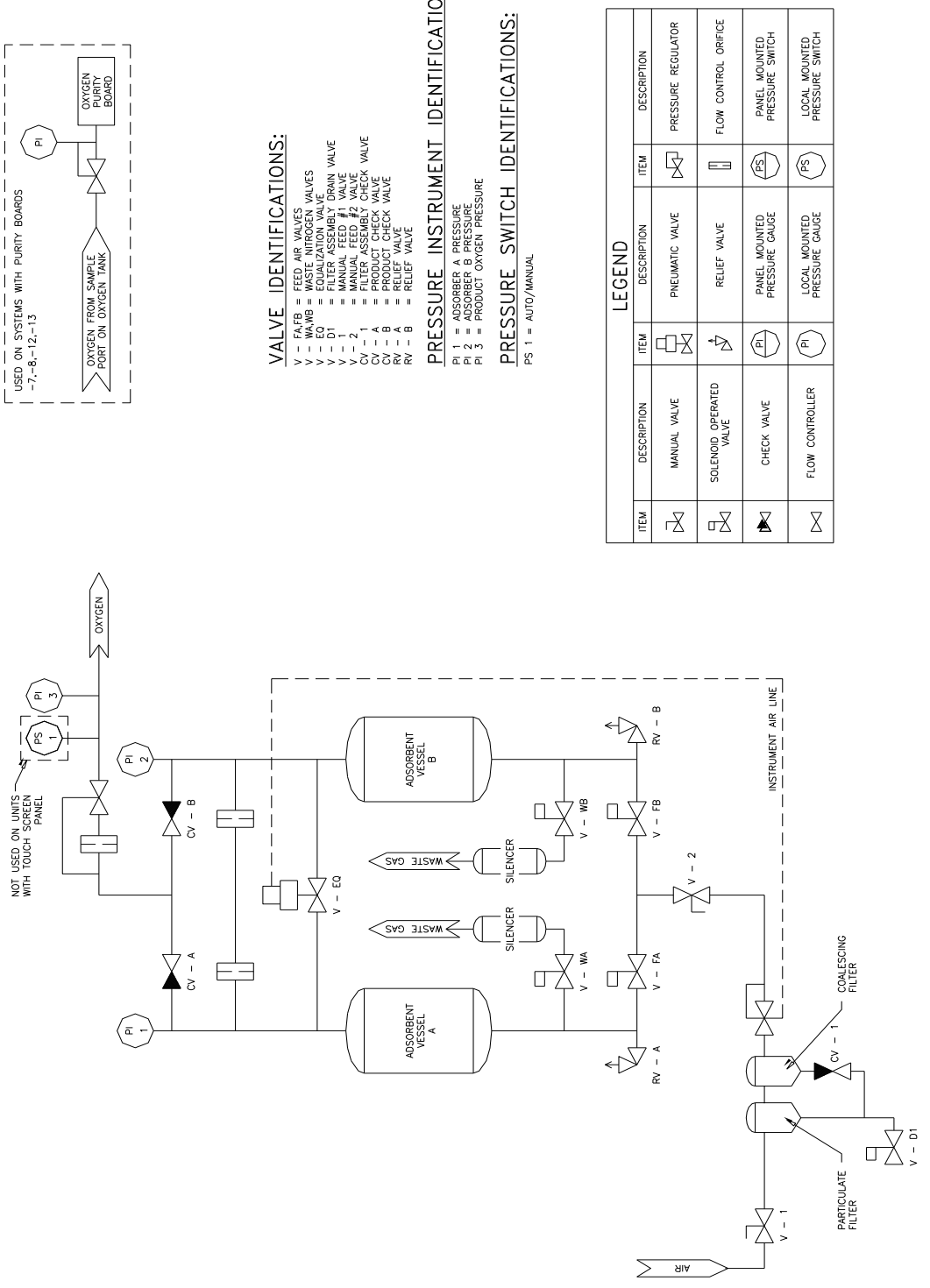

Figure A.4: Flow Schematics – AS-D+

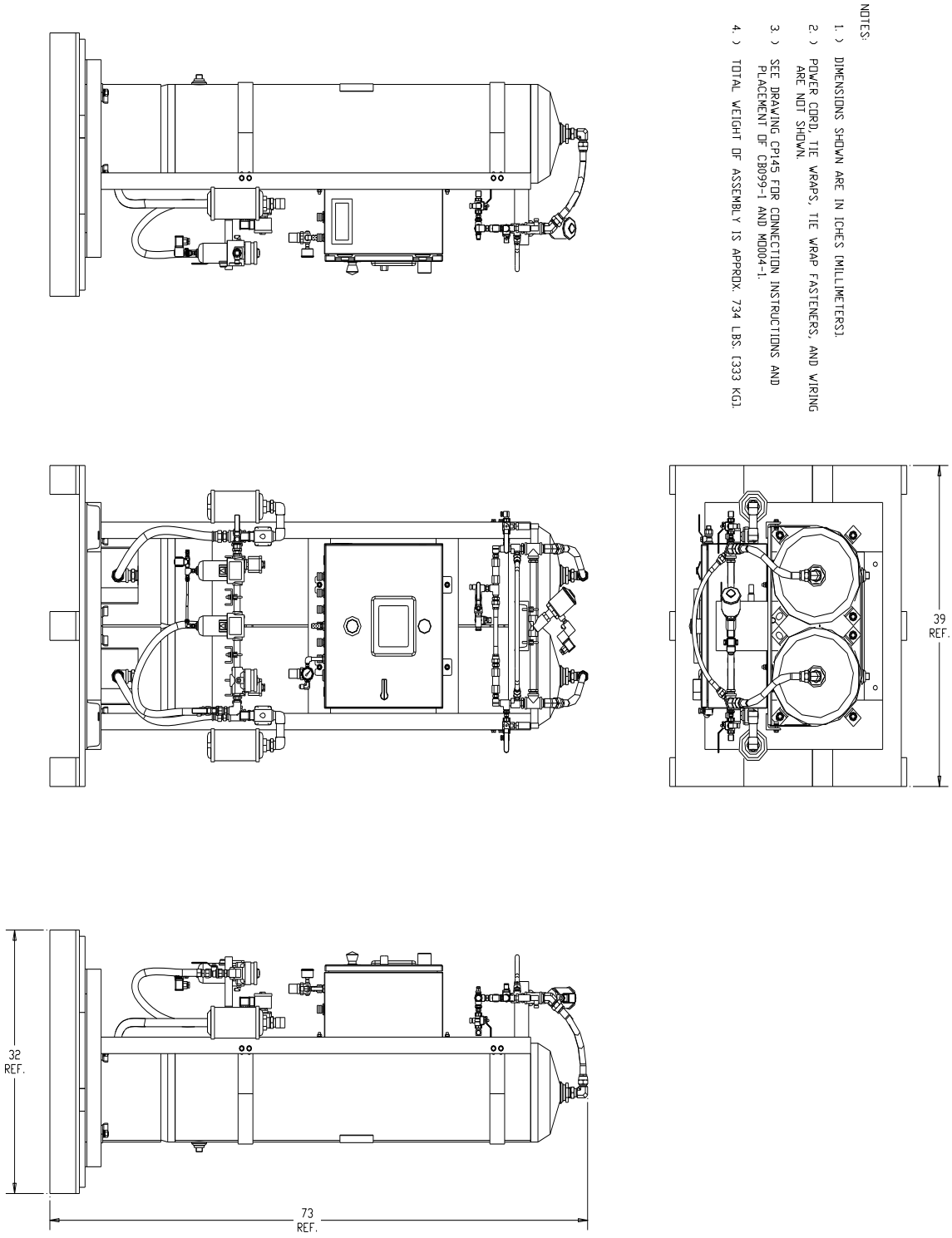

Figure A.5: General Arrangement Drawing – AS-E

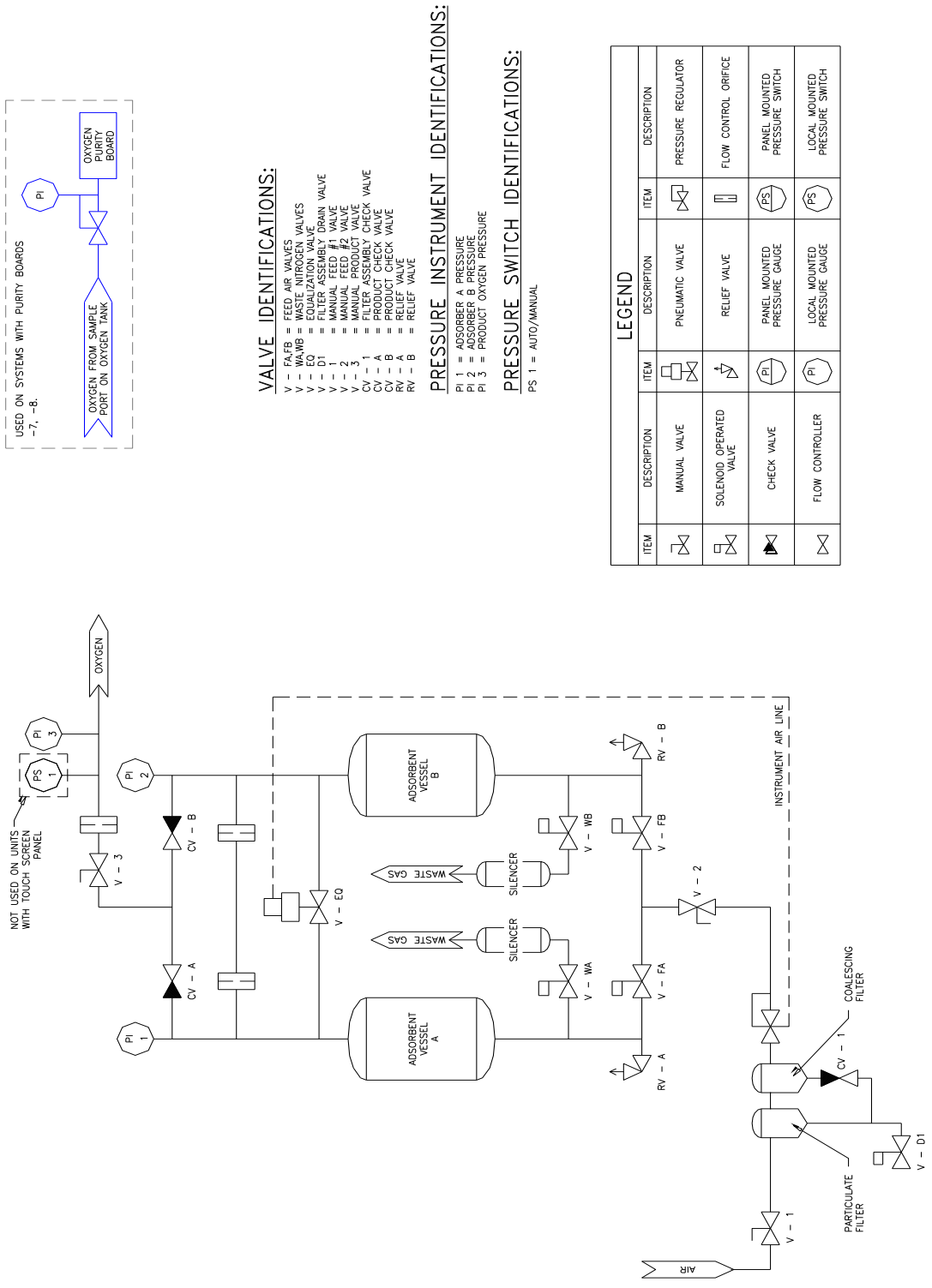

Figure A.6: Flow Schematic – AS-E

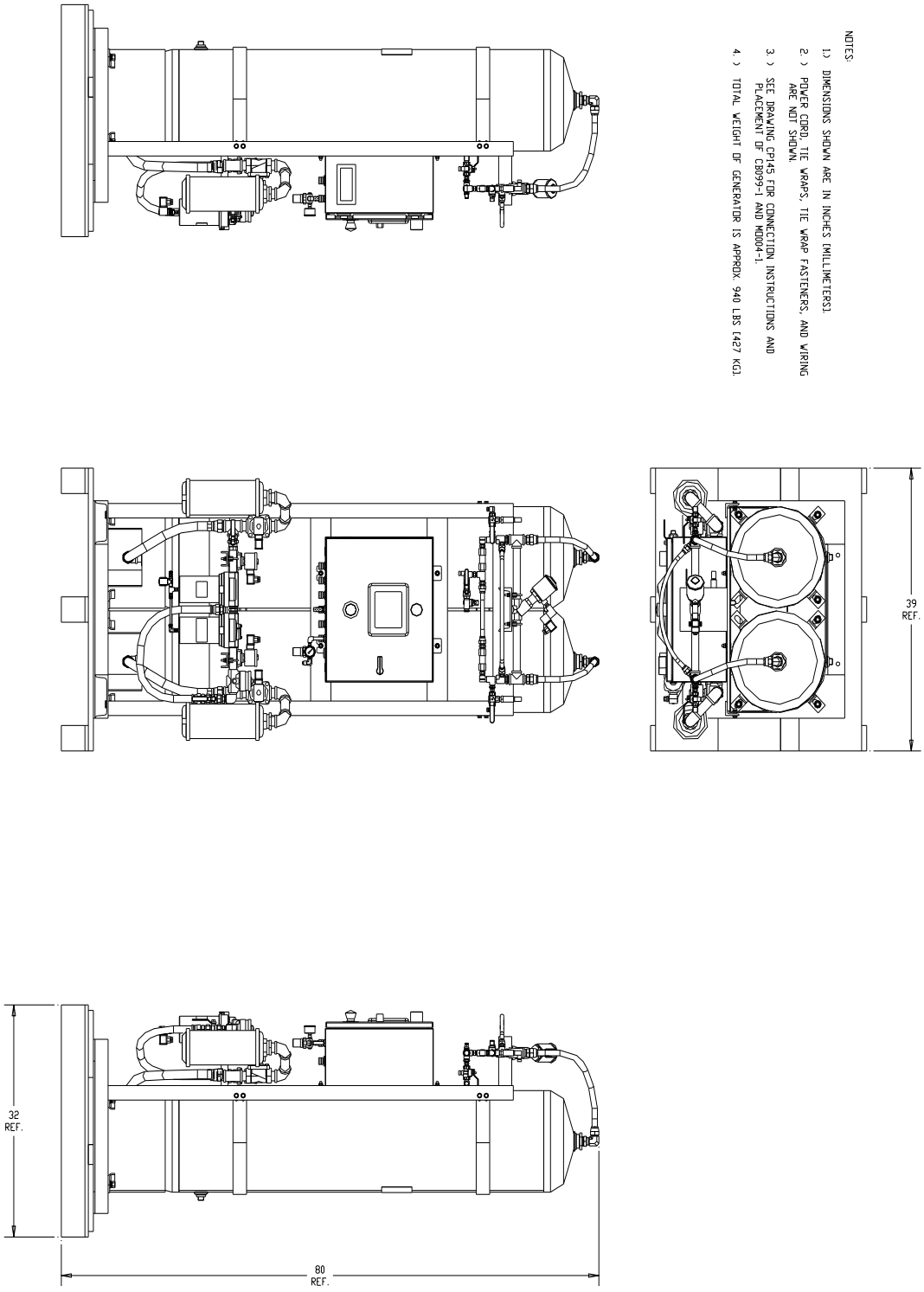

Figure A.7: General Arrangement Drawing – AS-G

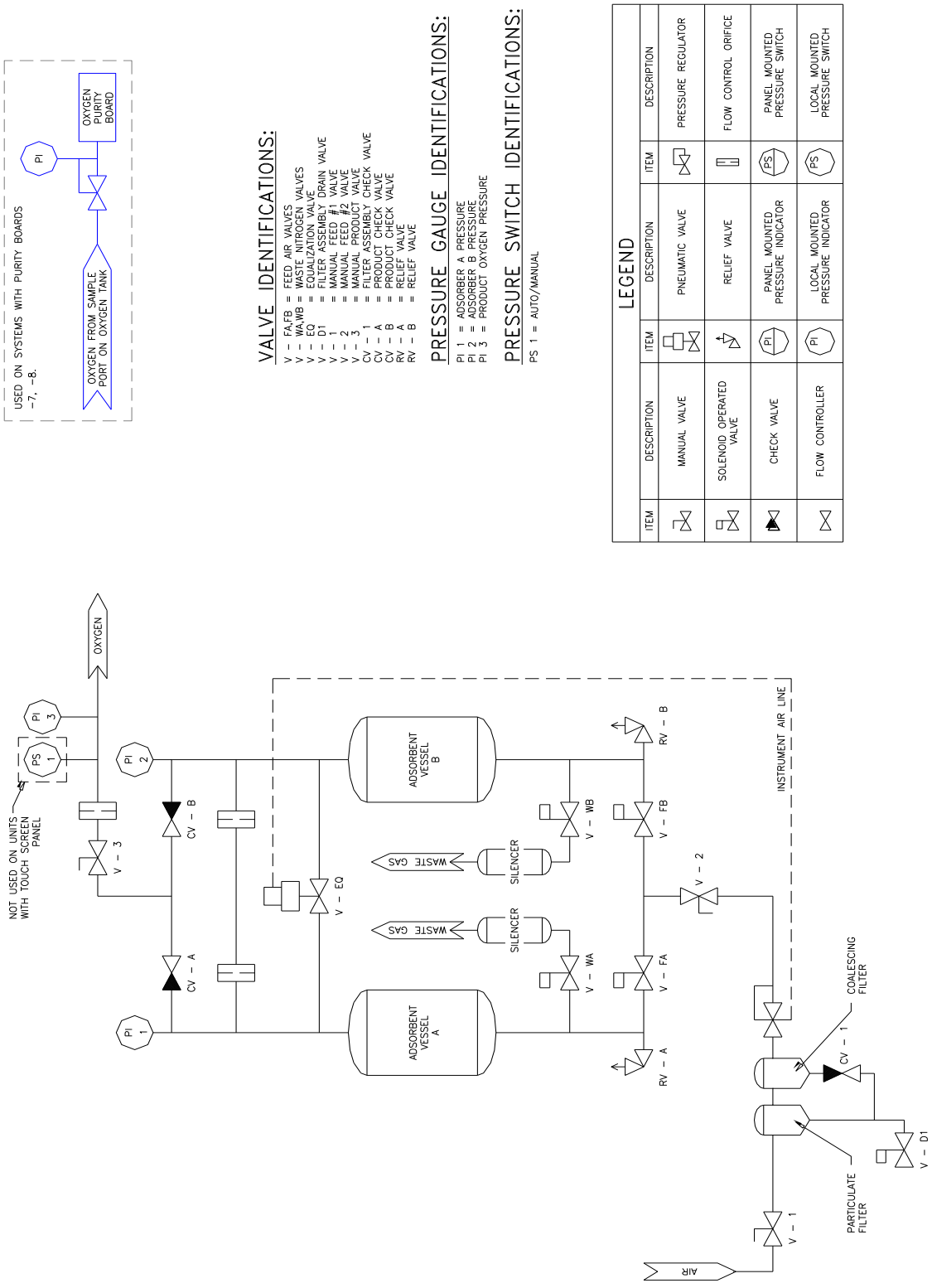

Figure A.8: Flow Schematic – AS-G

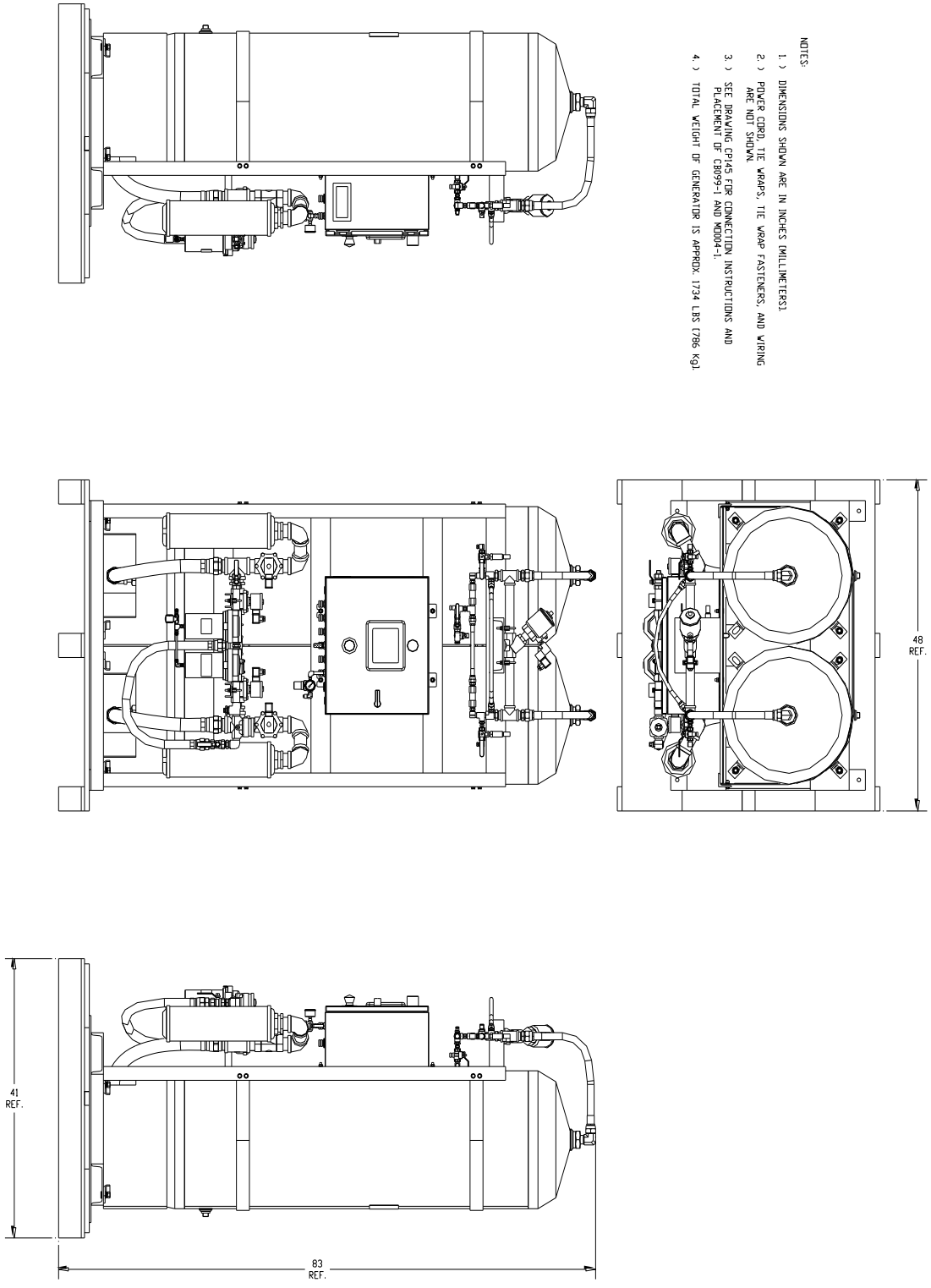

Figure A.9: General Arrangement Drawing – AS-J

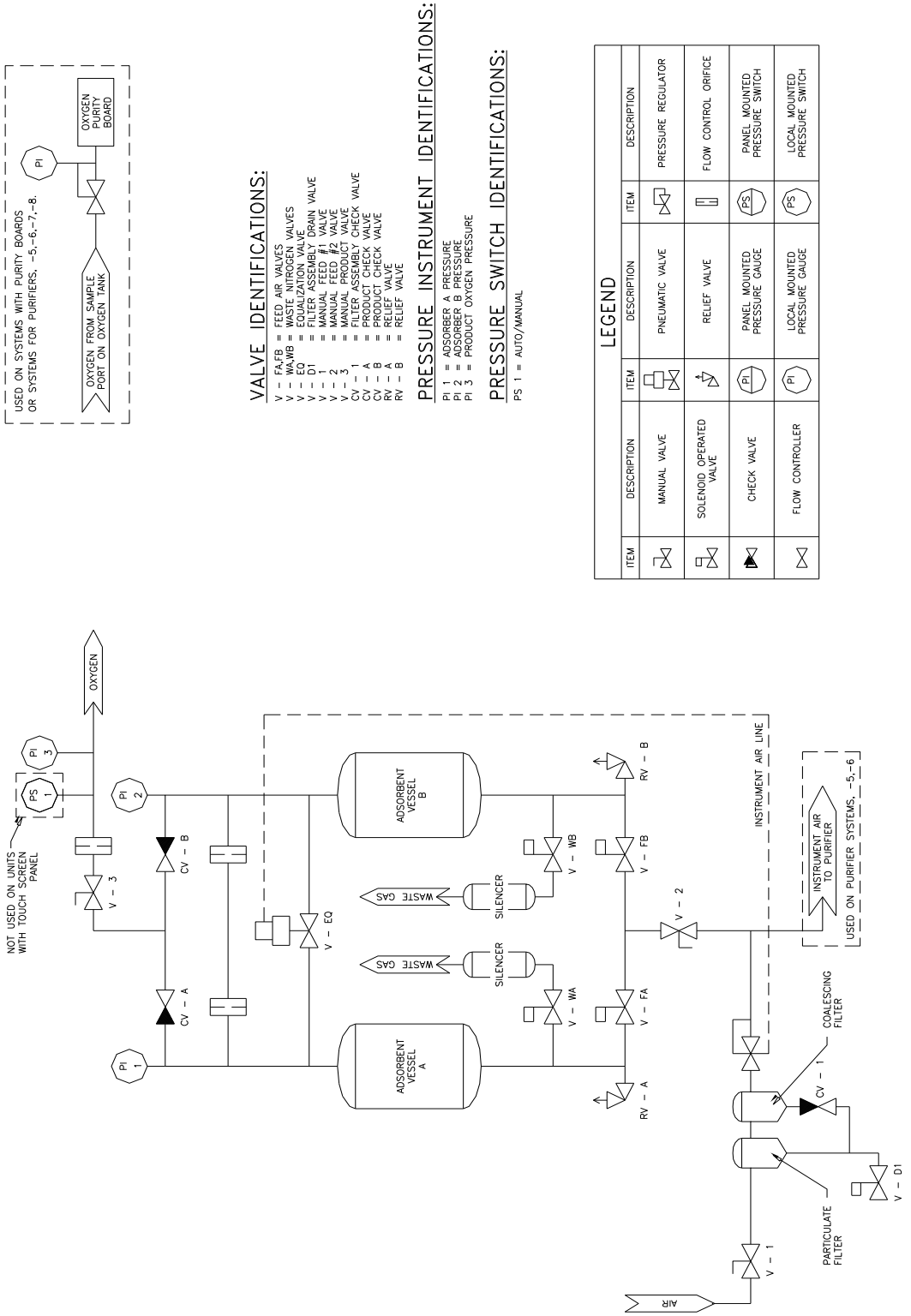

Figure A.10: Flow Schematic – AS-J

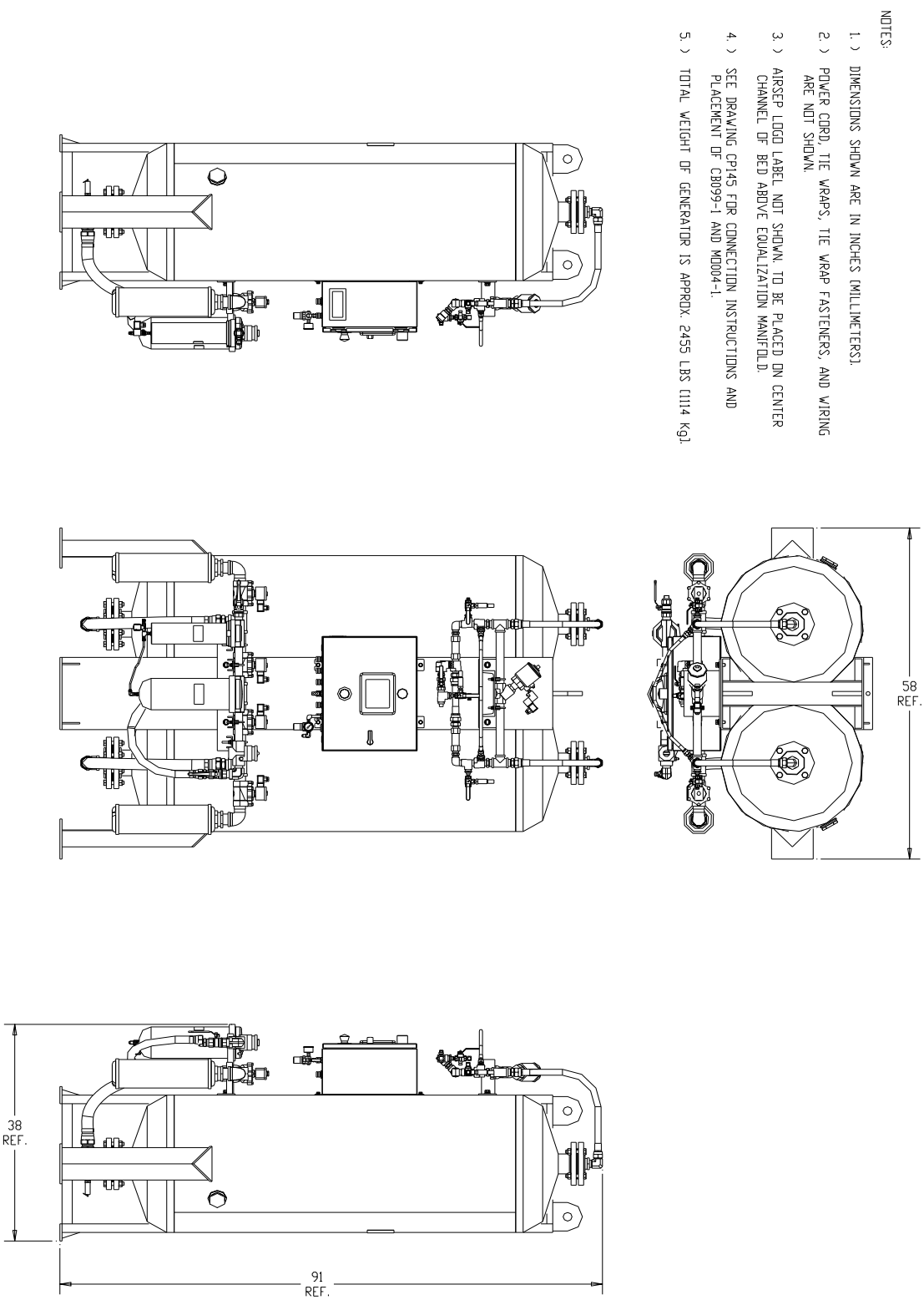

Figure A.11: General Arrangement Drawing – AS-K

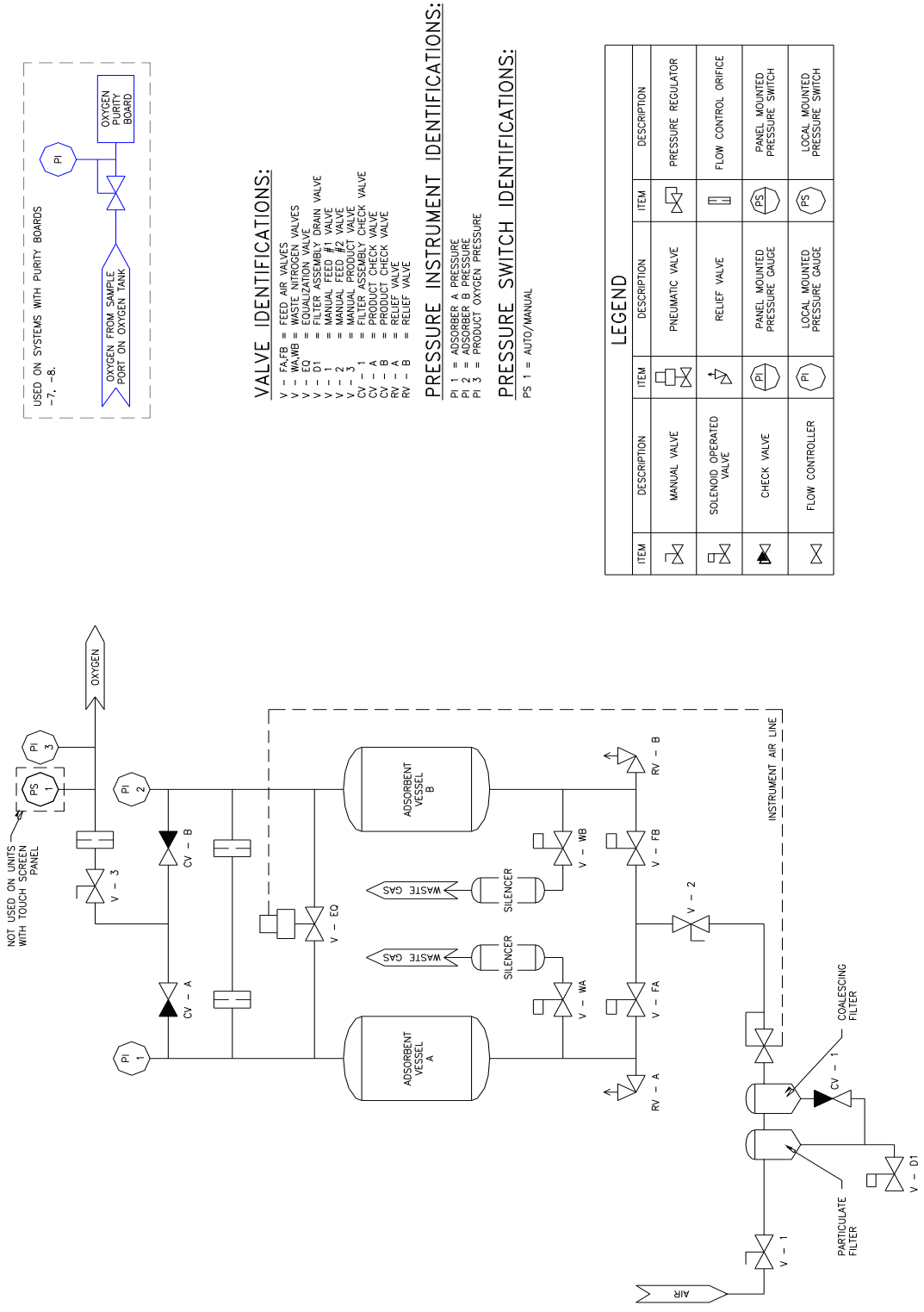

Figure A.12: Flow Schematic – AS-K

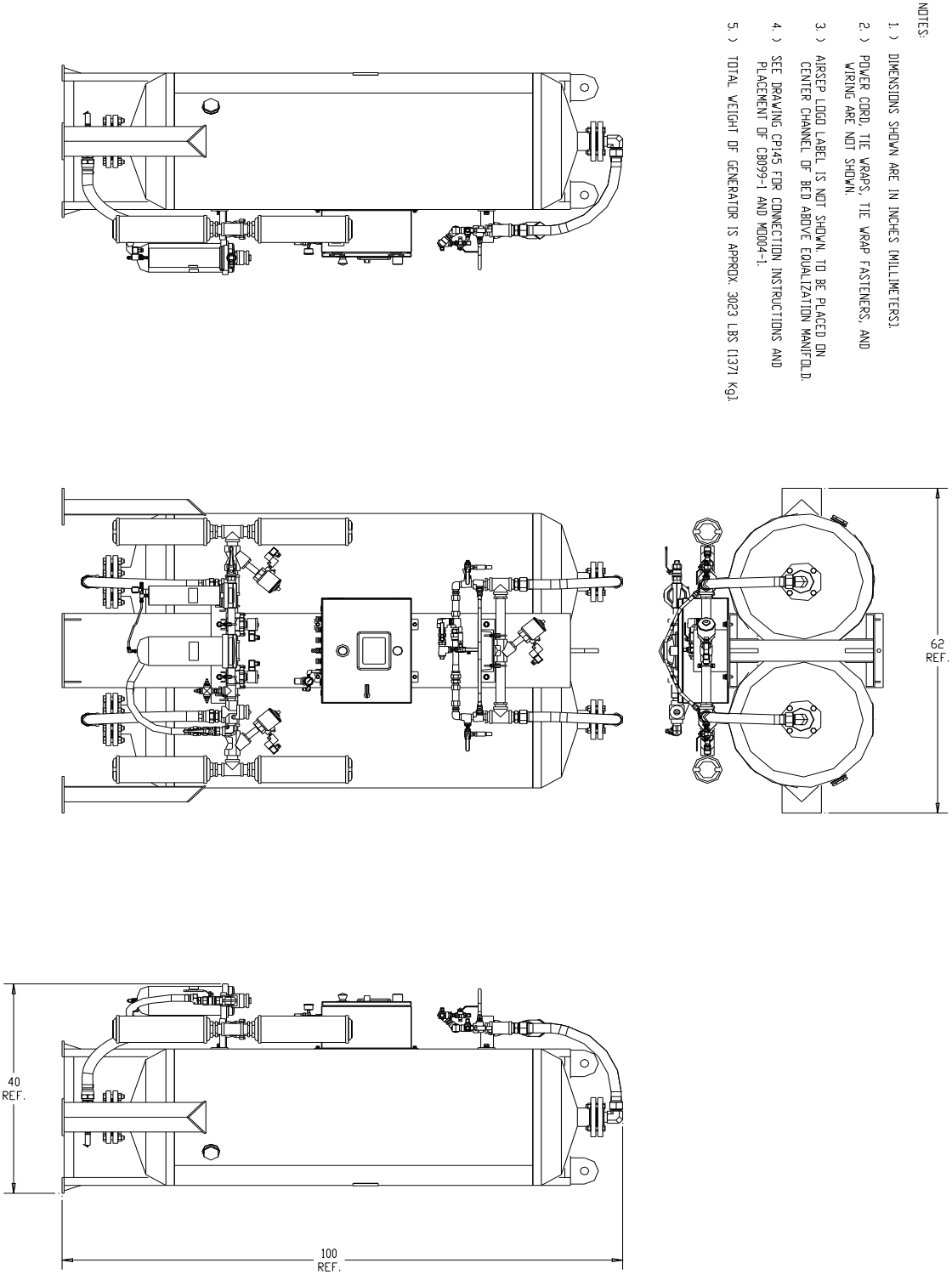

Figure A.13: General Arrangement Drawing – AS-L

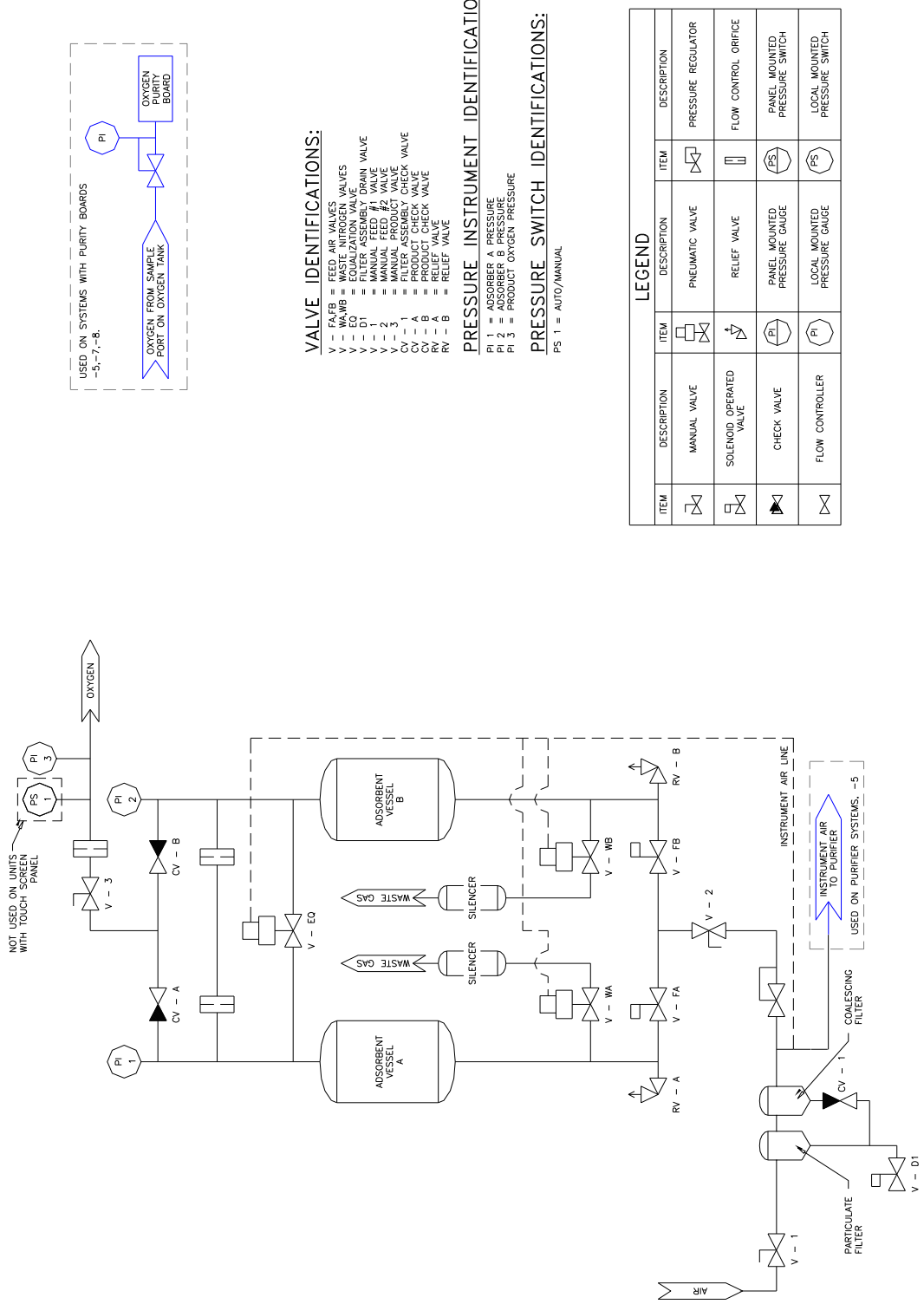

Figure A.14: Flow Schematic – AS-L

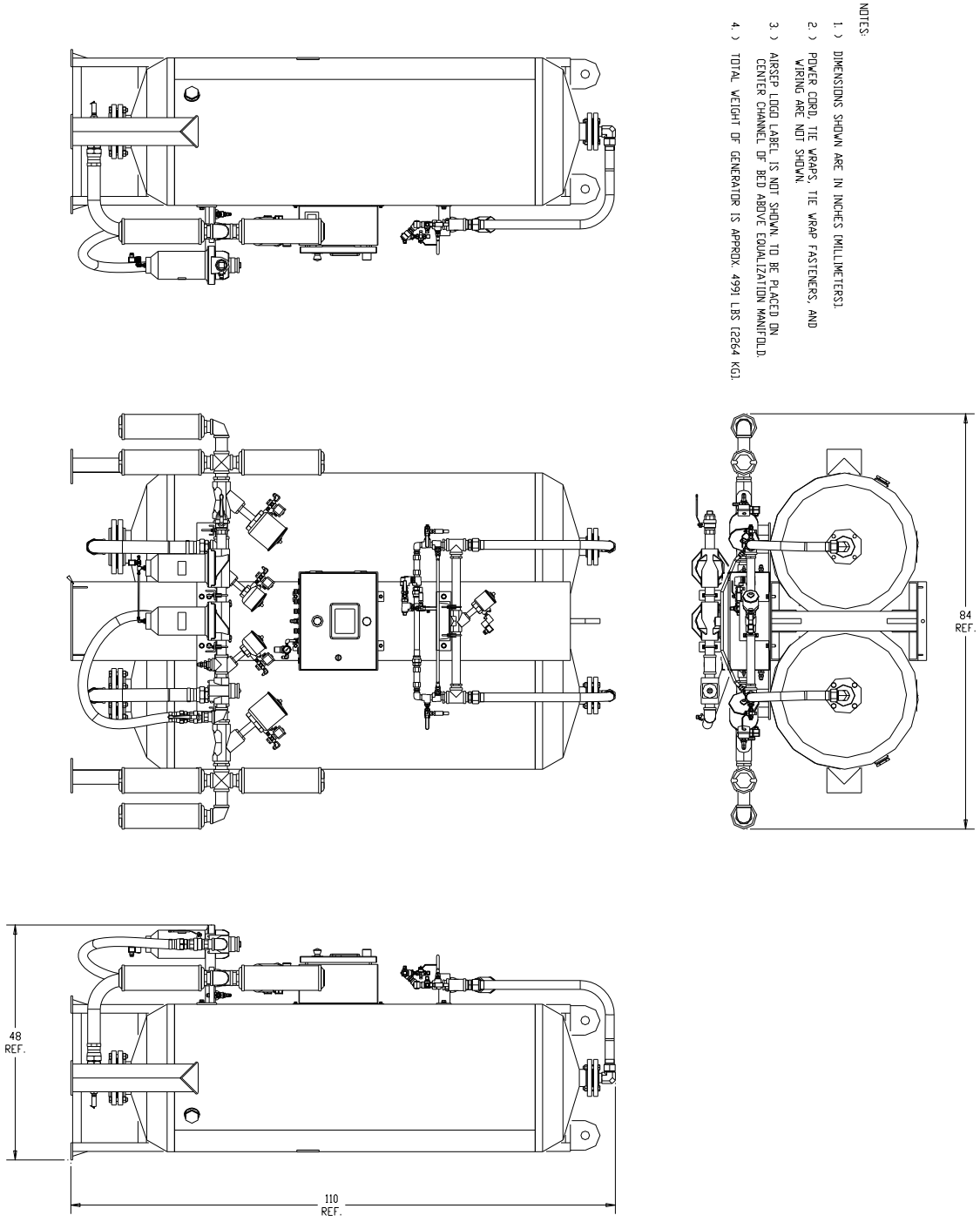

Figure A.15: General Arrangement Drawing – AS-N

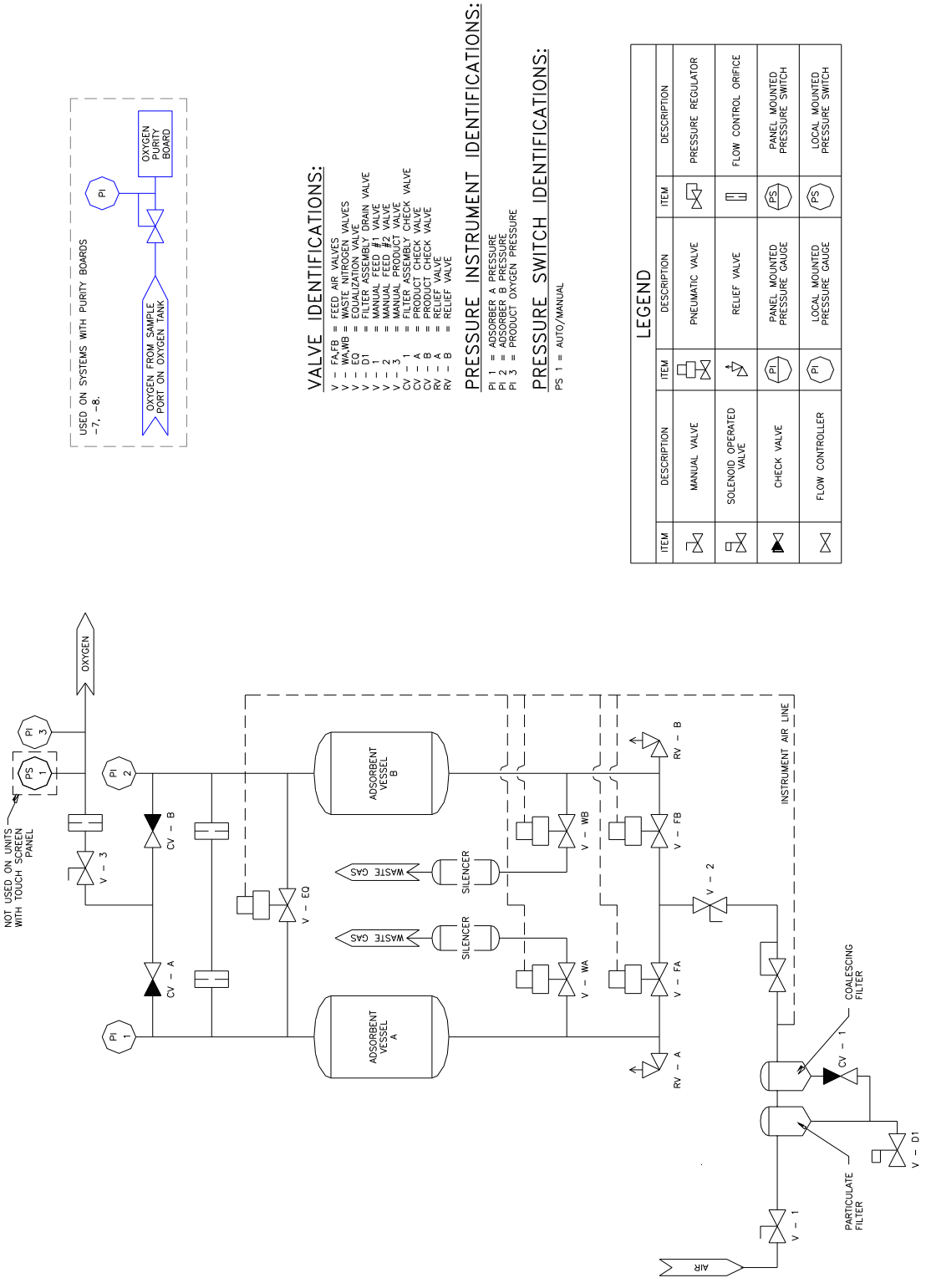

Figure A.16: Flow Schematic – AS-N

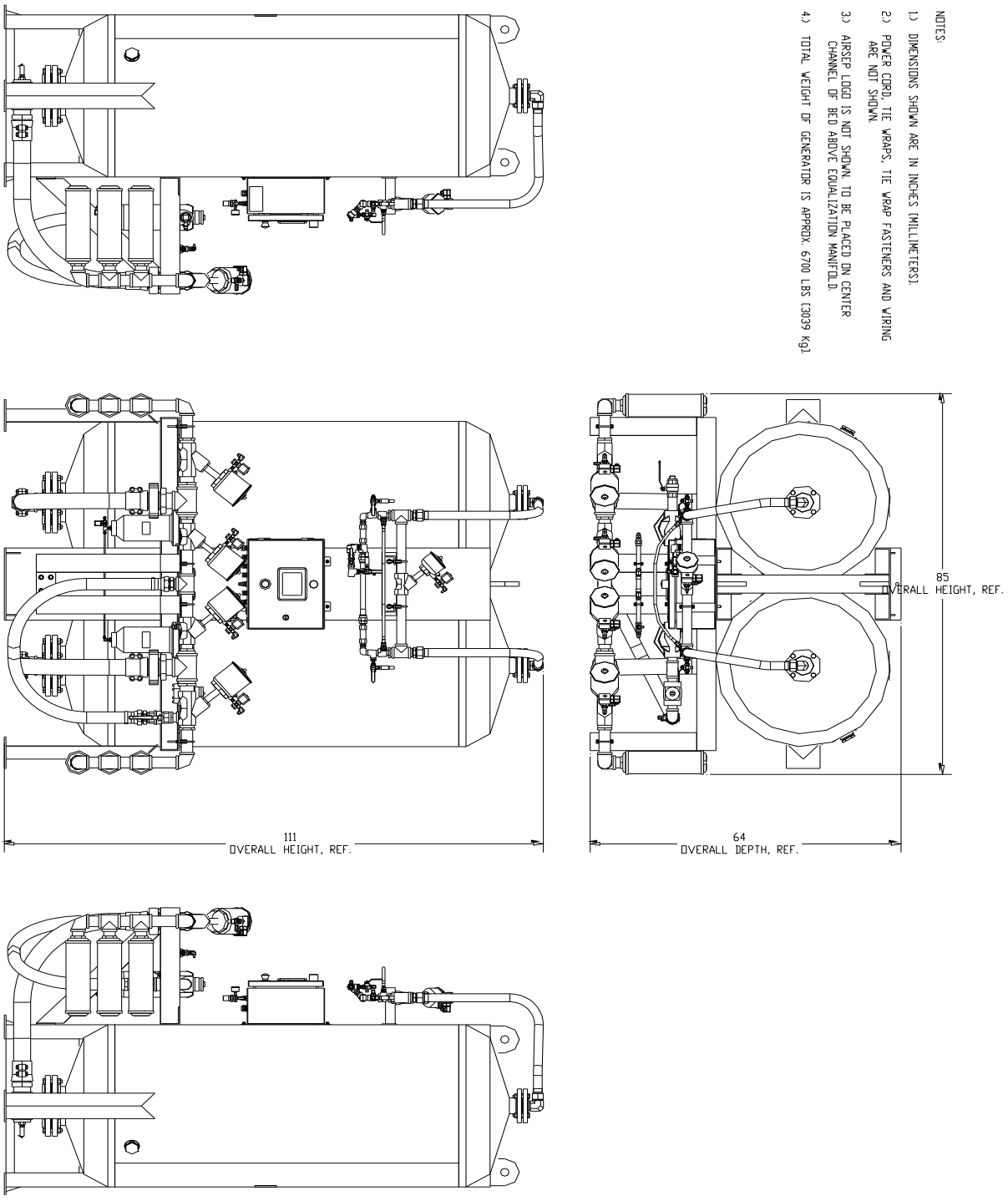

Figure A.17: General Arrangement Drawing – AS-P

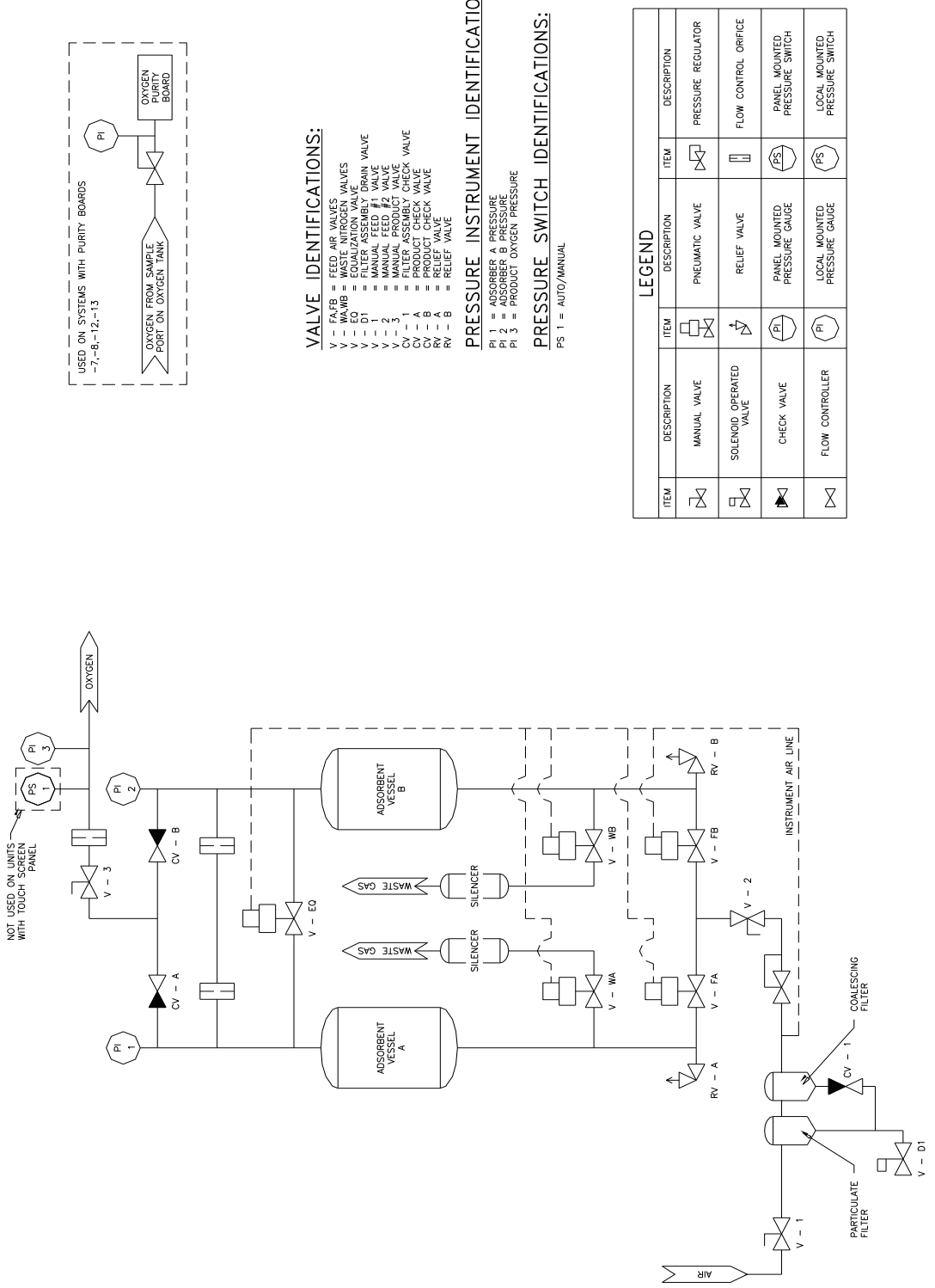

Figure A.18: Flow Schematic – AS-P

Electrical Schematics – AS-D+ – AS-P

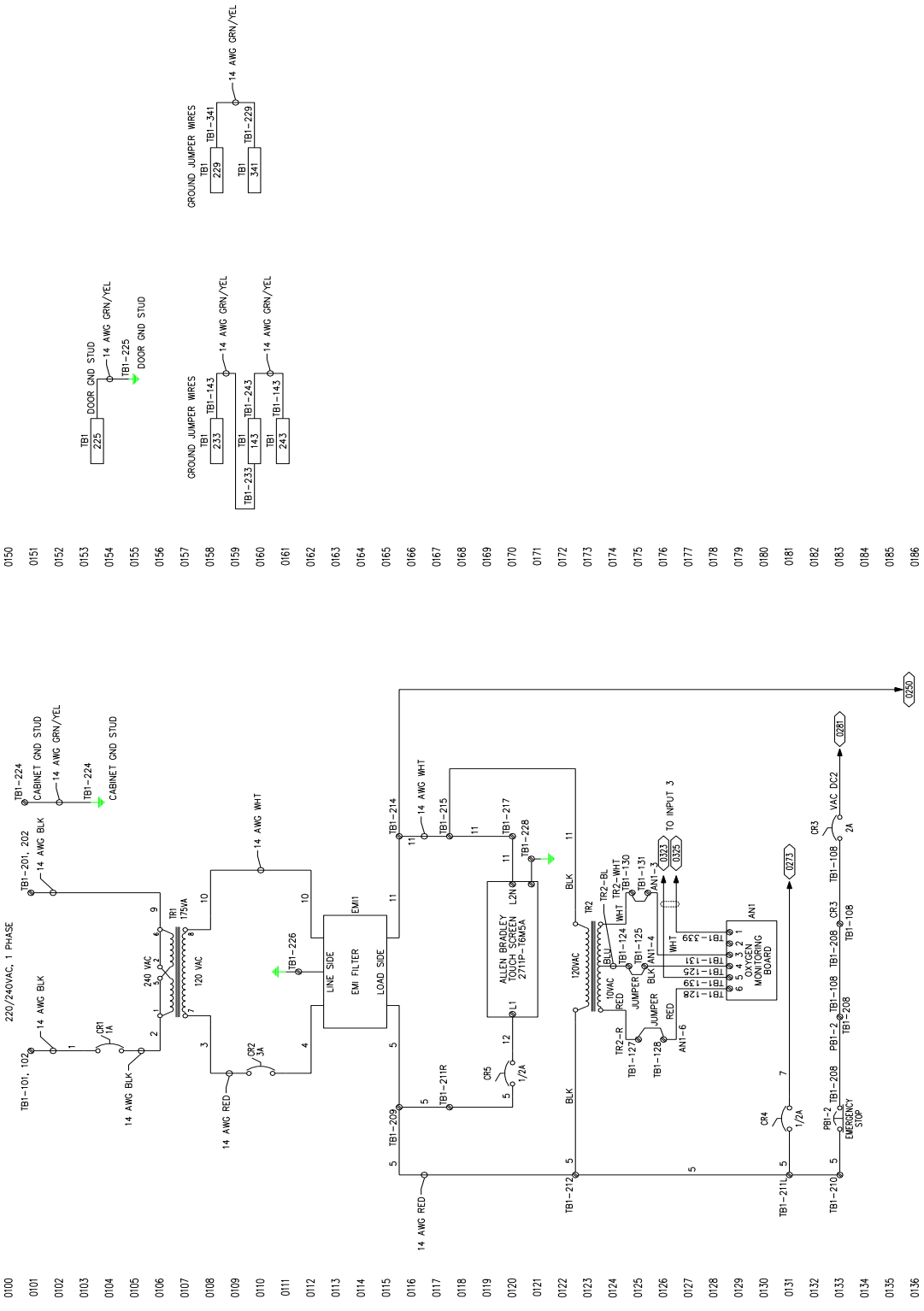

Figure A.19: Electrical Schematic – Sheet 1

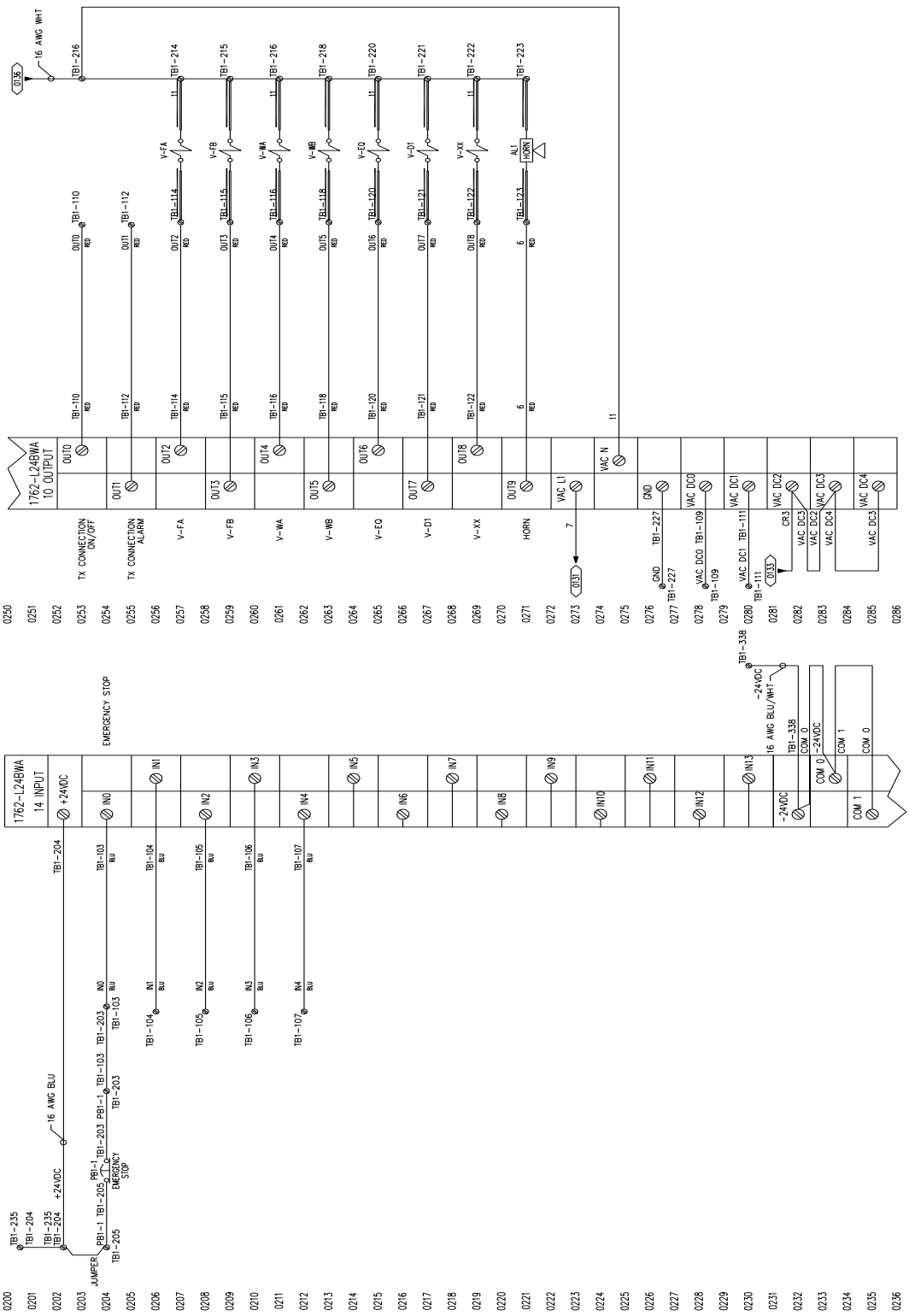

Figure A.20: Electrical Schematic – Sheet 2

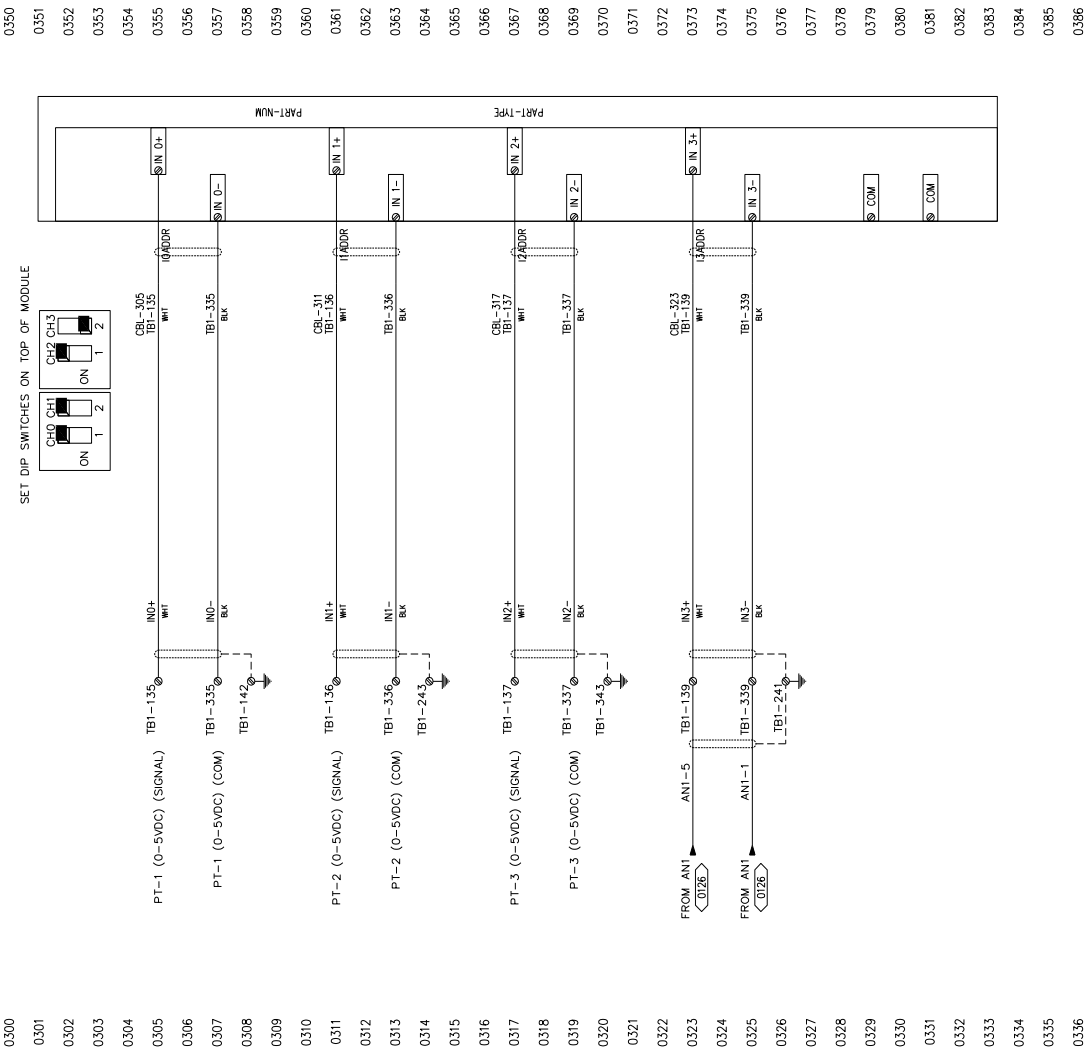

Figure A.21: Electrical Schematic – Sheet 3

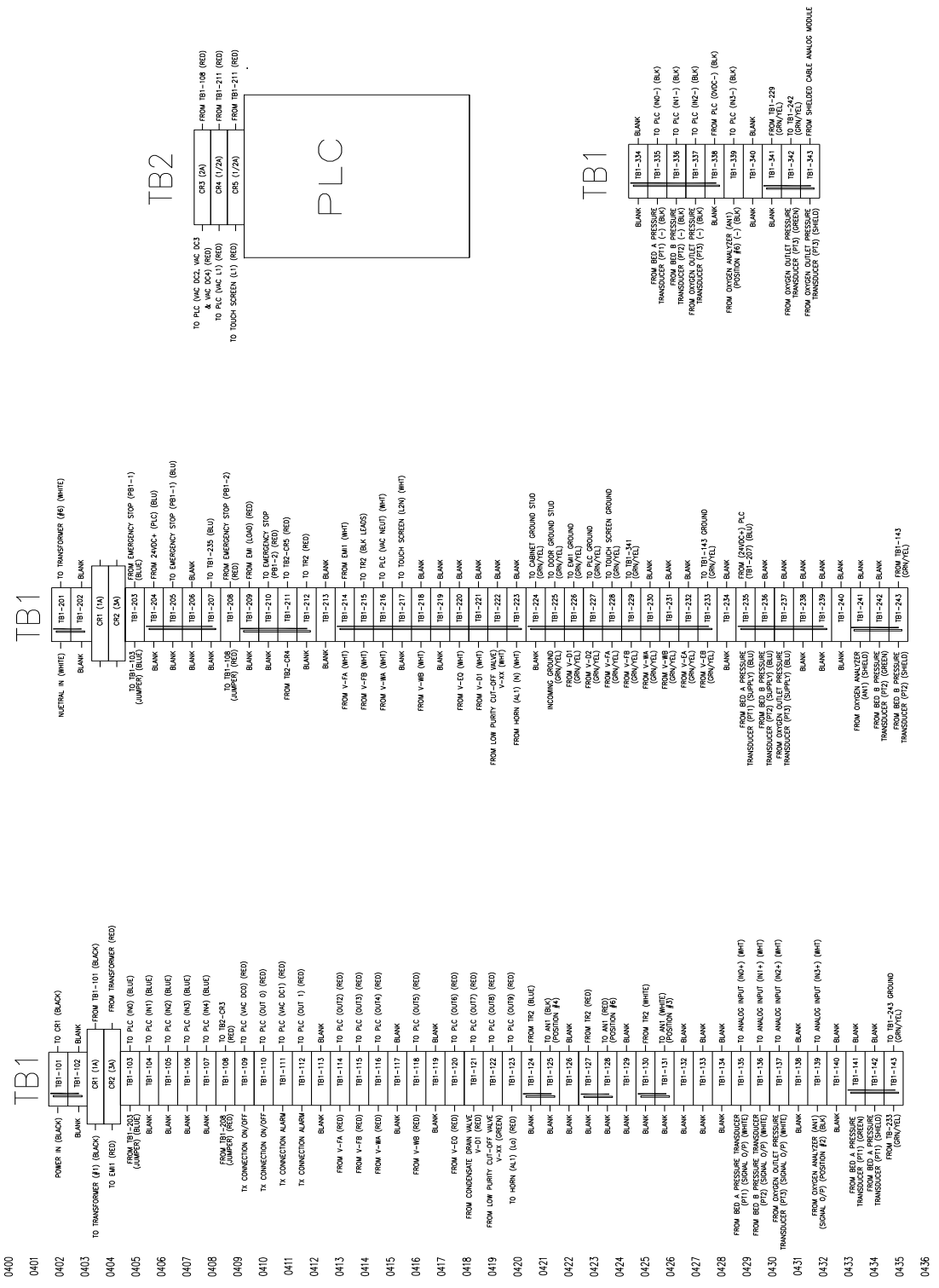

Figure A.22: Electrical Schematic – Sheet 4

B Appendix Warranty/Returns

Product Warranty

AirSep Corporation ("AirSep") warrants to the party purchasing from AirSep (the "original purchaser") the PSA oxygen generator to be free from defect in parts and workmanship for one year from the date of start-up, not to exceed eighteen (18) months from the date of shipment to the original purchaser, under normal use, maintenance and operation*. TO THE EXTENT PERMITTED UNDER APPLICABLE LAW, ALL WARRANTIES WITH RESPECT TO SUCH UNIT SHALL ONLY EXTEND TO AND BE FOR THE BENEFIT OF THE ORIGINAL PURCHASER AND SHALL NOT BE ASSIGNABLE TO, EXTEND TO OR BE FOR THE BENEFIT OF ANY OTHER PARTY. AirSep's obligations under this warranty are limited, at AirSep's option, to the repair, replacement or refunding the purchase price of any such unit of equipment (or part thereof) found by AirSep to be defective in parts or workmanship; provided, however, that AirSep shall have no obligation hereunder with respect to a defective part unless it receives written notice of such defect prior to the expiration of the applicable warranty period as referenced above.

Each unit of equipment for which a warranty claim is asserted shall, at the request of AirSep, be returned on a prepaid basis with proof of purchase date to the AirSep factory specified by AirSep at the expense of the original purchaser. Replacement parts shall be warranted as stated above for the unexpired portion of the original warranty. This warranty does not extend to any unit or part subjected to misuse (at AirSep's sole determination), accident, improper maintenance or application, or which has been repaired or altered outside of the AirSep factory without the express prior written authorization of AirSep.

Notwithstanding anything to the contrary contained herein, during the applicable warranty period, as specified above, AirSep will pay the cost of return freight charges to the original purchaser, provided an authorized AirSep representative approved return of the unit or parts, for any equipment found by AirSep to be defective. For warranty repairs performed during the first 90 days from the date of invoice, AirSep will pay freight both ways. After the applicable parts warranty period has expired, the original purchaser is responsible for freight both ways

* Please refer to the appropriate product documentation for applicable installation and operating requirements.

Limits of Liability

THE FOREGOING WARRANTY IS THE ONLY WARRANTY MADE BY AIRSEP WITH RESPECT TO THE EQUIPMENT (OR ANY PART THEREOF) AND IS IN LIEU OF ANY OTHER WARRANTY, EXPRESSED OR IMPLIED, IN FACT OR IN LAW, INCLUDING WITHOUT LIMITATION ANY WARRANTIES OF MERCHANTABILITY OR FITNESS FOR ANY PARTICULAR PURPOSE. IT IS EXPRESSLY UNDERSTOOD THAT THE SOLE AND EXCLUSIVE REMEDY FOR ANY DEFECT IN PARTS OR WORKMANSHIP IS LIMITED TO ENFORCEMENT OF AIRSEP'S OBLIGATIONS AS SET FORTH ABOVE, AND AIRSEP SHALL NOT BE LIABLE TO ORIGINAL PURCHASER OR ANY OTHER PARTY FOR LOSS OF USE OF THE EQUIPMENT, LOST PROFITS OR FOR ANY OTHER SPECIAL, INDIRECT, INCIDENTAL, OR CONSEQUENTIAL DAMAGES (EVEN IF AIRSEP HAS BEEN ADVISED OF THE POSSIBILITY OF SUCH DAMAGES).

AirSep oxygen generators are sold for use in industrial applications only. Contact AirSep Corporation or an authorized AirSep Corporation representative before you use this unit for any medical application.

Returning the Oxygen Generator or a Component for Service

If the oxygen generator or a defective part requires service, contact your distributor. If instructed by your distributor to contact AirSep Corporation, follow the procedure below to return the oxygen generator or a component for service or credit.

1) Obtain a Return Goods Authorization (RGA) number from the AirSep Commercial Products Service Department. (Refer to Chapter 8, Troubleshooting for information about contacting AirSep Corporation.) Before you call for service assistance, have the following information readily available:
    - Oxygen Generator Model
    - Serial Number
    - Hours of Use
    - Invoice Date

AirSep Corporation issues no credit for any warranted item until you present the model number, serial number, and invoice date of the oxygen generator, and defective part is returned to AirSep Corporation.

2) Write the RGA number clearly on the outside of the shipping container.

AirSep Corporation accepts no item(s) for service or credit unless prior written authorization was issued by AirSep Corporation.

3) Return item(s) in their original packaging material. Pack merchandise for a safe return. AirSep Corporation assumes no responsibility for damage that occurs in transit. Any damage to the oxygen generator or a component because of failure to follow this procedure is the sole responsibility of the customer.

Return item(s) on a freight prepaid basis only.

C Appendix Parts List

Use the following lists to order parts for the oxygen generator. To order, please contact your distributor. If instructed by your distributor to contact AirSep Corporation, contact the AirSep Commercial Products Service Department as described in Chapter 8, Troubleshooting. If the list does not contain the part you require, please provide a precise description of the part when you call.

AS-D+ Parts

Spare Parts

Item	Qty	Part #
8,000 Hour Kit/1 Year		
Prefilter Element FRP-95-115 1/4000 hrs	2	FI029-1
Microalescer Element MTP-95-549 1/8000 hrs	1	FI020-1
16,000 Hour Kit/2 Year		
Prefilter Element FRP-95-115 1/4000 hrs	4	FI029-1
Microalescer Element MTP-95-549 1/8000 hrs	2	FI020-1
3/8" Feed Valve Rebuild Kit 302272	2	VA096-1
3/8" Waste Valve Rebuild Kit 302272	2	VA096-1
3/8" Equalization Valve Rebuild Kit	1	VA432-1
1/8" Drain Valve	1	VA495-2
40,000 Hour Kit/5 Year		
Prefilter Element FRP-95-115 1/4000 hrs	10	FI029-1
Microalescer Element MTP-95-549 1/8000 hrs	5	FI020-1
3/8" Feed Valve Rebuild Kit 302272	4	VA096-1
3/8" Waste Valve Rebuild Kit 302272	4	VA096-1
3/8" Equalization Valve Rebuild Kit	4	VA432-1
1/8" Drain Valve	2	VA495-2
Emergency spares		
3/8" Feed,Waste,Equalization Valve Coil 2184103		VA112-1
Sol. Valve for EQ		VA430-1
Guage 0-100psi		GA052-1
Led Lamp Green		IL057-2
Led Lamp Yellow		IL057-3
MagnaLube		PS211-1

AS-E Parts

Spare Parts

Item	Qty	Part #
8,000 Hour Kit/1 Year		
Prefilter Element FRP-95-115 1/4000 hrs	2	FI029-1
Microalescer Element MTP-95-549 1/8000 hrs	1	FI020-1
16,000 Hour Kit/2 Year		
Prefilter Element FRP-95-115 1/4000 hrs	4	FI029-1
Microalescer Element MTP-95-549 1/8000 hrs	2	FI020-1
1/2" Feed Valve Rebuild Kit 302272	2	VA096-1
3/4" Waste Valve Rebuild Kit 302276	2	VA101-1
1/2" Equalization Valve Rebuild Kit C131204	1	VA432-1
1/8" Drain Valve SC8225B003V	1	VA495-2
40,000 Hour Kit/5 Year		
Prefilter Element FRP-95-115 1/4000 hrs	10	FI029-1
Microalescer Element MTP-95-549 1/8000 hrs	5	FI020-1
1/2" Feed Valve Rebuild Kit 302272	4	VA096-1
3/4" Waste Valve Rebuild Kit 302276	4	VA101-1
1/2" Equalization Valve Rebuild Kit C131204	2	VA432-1
1/8" Drain Valve SC8225B003V	2	VA495-2
Emergency spares		
Muffler Element 1"		MU055-1
1/2" EQ Valve & Operator		VA426-1
SOL Valve for Operator		VA430-1
3/8" Check Valve		VA027-1
Feed, Waste Valve Coil 238612032		VA389-1
MagnaLube		PS211-1

AS-G Parts

Spare Parts

Item	Qty	Part #
8,000 Hour Kit/1 Year		
Prefilter Element FRP-95-209 1/4000 hrs	2	FI030-1
Microalescer Element MTP-95-551 1/8000 hrs	1	FI016-1
16,000 Hour Kit/2 Year		
Prefilter Element FRP-95-209 1/4000 hrs	4	FI030-1
Microalescer Element MTP-95-551 1/8000 hrs	2	FI016-1
3/4" Feed Valve Rebuild Kit 302276	2	VA101-1
1" Waste Valve Rebuild Kit 302283	2	VA103-1
3/4"" Equalization Valve Rebuild Kit C131205	1	VA433-1
1/8" Drain Valve SC8225B003V	1	VA495-2
40,000 Hour Kit/5 Year		
Prefilter Element FRP-95-209 1/4000 hrs	10	FI030-1
Microalescer Element MTP-95-551 1/8000 hrs	5	FI016-1
3/4" Feed Valve Rebuild Kit 302276	4	VA101-1
1" Waste Valve Rebuild Kit 302283	4	VA103-1
3/4"" Equalization Valve Rebuild Kit C131205	2	VA433-1
1/8" Drain Valve SC8225B003V	2	VA495-2
Emergency spares		
Muffler Element 1 1/2"		MU056-1
3/4" EQ Valve & Operator		VA427-1
SOL Valve for Operator		VA430-1
3/8" Check Valve		VA027-1
3/4" Feed Valve Coil 238612032		VA389-1
1" Waste Valve Coil 272612032		VA360-1
MagnaLube		PS211-1

AS-J Parts

Spare Parts

Item	Qty	Part #
8,000 Hour Kit/1 Year		
Prefilter Element FRP-95-209 1/4000 hrs	2	FI030-1
Microalescer Element MTP-95-551 1/8000 hrs	1	FI016-1
16,000 Hour Kit/2 Year		
Prefilter Element FRP-95-209 1/4000 hrs	4	FI030-1
Microalescer Element MTP-95-551 1/8000 hrs	2	FI016-1
1" Feed Valve Rebuild Kit 302283	2	VA103-1
1 1/2" Waste Valve Rebuild Kit 302286N	2	VA104-1
1" Equalization Valve Rebuild Kit C131206	1	VA434-1
1/8" Drain Valve SC8225B003V	1	VA495-2
40,000 Hour Kit/5 Year		
Prefilter Element FRP-95-209 1/4000 hrs	10	FI030-1
Microalescer Element MTP-95-551 1/8000 hrs	5	FI016-1
1" Feed Valve Rebuild Kit 302283	4	VA103-1
1 1/2" Waste Valve Rebuild Kit 302286N	4	VA104-1
1" Equalization Valve Rebuild Kit C131206	2	VA434-1
1/8" Drain Valve SC8225B003V	2	VA495-2
Emergency spares		
Muffler Element 2"		MU057-1
1" EQ VALVE & OPERATOR		VA428-1
SOL FOR OPERATOR		VA430-1
3/8" Check Valve		VA027-1
Feed, Waste Valve Coil 272612032		VA360-1
MagnaLube		PS211-1

AS-K Parts

Spare Parts

Item	Qty	Part #
8,000 Hour Kit/1 Year		
Prefilter Element FRP-95-209 1/4000 hrs	2	FI030-1
Microalescer Element MTP-95-559 1/8000 hrs	1	FI017-1
16,000 Hour Kit/2 Year		
Prefilter Element FRP-95-209 1/4000 hrs	4	FI030-1
Microalescer Element MTP-95-559 1/8000 hrs	2	FI017-1
1 1/2" Feed Valve Rebuild Kit 302286N	2	VA104-1
1 1/2" Waste Valve Rebuild Kit 302286N	2	VA104-1
1" Equalization Valve Rebuild KitC131206	1	VA434-1
1/8" Drain Valve SC8225B003V	1	VA495-2
40,000 Hour Kit/5 Year		
Prefilter Element FRP-95-209 1/4000 hrs	10	FI030-1
Microalescer Element MTP-95-559 1/8000 hrs	5	FI017-1
1 1/2" Feed Valve Rebuild Kit 302286N	4	VA104-1
1 1/2" Waste Valve Rebuild Kit 302286N	4	VA104-1
1" Equalization Valve Rebuild Kit C131206	2	VA434-1
1/8" Drain Valve SC8225B003V	2	VA495-2
Emergency spares		
3/4" Check Valve		VA027-3
1 1/2" Feed, Waste Valve Coil 272612032		VA360-1
1" EQ VALVE & OPERATOR		VA428-1
SOL VALVE FOR OPERATOR		VA430-1
Muffler Element 2"		MU057-1
MagnaLube		PS211-1

AS-L Parts

Spare Parts

Item	Qty	Part #
8,000 Hour Kit/1 Year		
Prefilter Element FRP-95-209 1/4000 hrs	2	FI030-1
Microalescer Element MTP-95-559 1/8000 hrs	1	FI017-1
16,000 Hour Kit/2 Year		
Prefilter Element FRP-95-209 1/4000 hrs	4	FI030-1
Microalescer Element MTP-95-559 1/8000 hrs	2	FI017-1
1 1/2" Feed Valve Rebuild Kit 302286N	2	VA104-1
1 1/2" Waste Valve Rebuild Kit 302286N	4	VA104-1
1 1/4" Equalization Valve Rebuild Kit C131207	1	VA435-1
1/8" Drain Valve SC8225B003V	1	VA495-2
40,000 Hour Kit/5 Year		
Prefilter Element FRP-95-209 1/4000 hrs	10	FI030-1
Microalescer Element MTP-95-559 1/8000 hrs	5	FI017-1
1 1/2" Feed Valve Rebuild Kit 302286N	4	VA104-1
1 1/2" Waste Valve Rebuild Kit 302286N	8	VA104-1
1 1/4" Equalization Valve Rebuild Kit C131207	2	VA435-1
1/8" Drain Valve SC8225B003V	2	VA495-2
Emergency spares		
Muffler Element 2"		MUO57-1
1 1/4" EQ Valve & Operator		VA431-1
SOL Valve for Operator		VA430-1
3/4" Check Valve		VA027-3
1 1/2" Feed, Waste Valve Coil 272 612 032		VA360-1
MagnaLube		PS211-1

AS-N Parts

Spare Parts

Item	Qty	Part #
8,000 Hour Kit/1 Year		
Prefilter Element FRP-95-209 1/4000 hrs	2	FI081-1
Microalescer Element MTP-95-559 1/8000 hrs	1	FI049-1
16,000 Hour Kit/2 Year		
Prefilter Element FRP-95-209 1/4000 hrs	4	FI081-1
Microalescer Element MTP-95-559 1/8000 hrs	2	FI049-1
1 1/2" Feed Valve Rebuild Kit C131208	2	VA451-1
2 1/2" Waste Valve Rebuild Kit C131622	2	VA490-1
1 1/4" Equalization Valve Rebuild Kit C131207	1	VA435-1
1/8" Drain Valve SC8225B003V	1	VA009-2
40,000 Hour Kit/5 Year		
Prefilter Element FRP-95-209 1/4000 hrs	10	FI081-1
Microalescer Element MTP-95-559 1/8000 hrs	5	FI049-1
1 1/2" Feed Valve Rebuild Kit C131208	4	VA451-1
2 1/2" Waste Valve Rebuild Kit C131622	4	VA490-1
1 1/4" Equalization Valve Rebuild Kit C131207	2	VA435-1
1/8" Drain Valve SC8225B003V	2	VA009-2
Emergency spares		
Muffler Element 2"		MUO57-1
Lamp LED green		IL057-2
Lamp LED yellow		IL057-3
Gauge 0-100psig		GA052-1
1 1/4" EQ Valve & Operator		VA431-1
SOL Valve for Operator VA431-1 EQ valve		VA430-1
1 1/2 "Feed Valve & Operator		VA429-2
SOL Valve for Operator VA429-2 EQ valve & VA447-1 Waste Valve		VA444-1
2 1/2" Waste Valve & Operator		VA447-1
3 Amp Fuse		FU004-1
2 Amp Fuse		FU015-1
.5 Amp Fuse		FU024-1
3/4" Check Valve		VA027-3
1 1/2" Feed Valve Coil 272 612 032		VA360-1
MagnaLube		PS211-1

AS-P Parts

Spare Parts

Item	Qty	Part #
8,000 Hour Kit/1 Year		
Prefilter Element FRP-95-209 1/4000 hrs	2	FI079-1
Microalescer Element MTP-95-559 1/8000 hrs	1	FI010-1
16,000 Hour Kit/2 Year		
Prefilter Element FRP-95-209 1/4000 hrs	4	FI079-1
Microalescer Element MTP-95-559 1/8000 hrs	2	FI010-1
2" Feed Valve Rebuild Kit	2	VA489-1
2 1/2" Waste Valve Rebuild Kit C131622	2	VA490-1
1 1/2" Equalization Valve Rebuild Kit	1	VA451-1
1/8" Drain Valve SC8225B003V	1	VA009-2
40,000 Hour Kit/5 Year		
Prefilter Element FRP-95-209 1/4000 hrs	10	FI079-1
Microalescer Element MTP-95-559 1/8000 hrs	5	FI010-1
2" Feed Valve Rebuild Kit	4	VA489-1
2 1/2" Waste Valve Rebuild Kit C131622	4	VA490-1
1 1/2" Equalization Valve Rebuild Kit	2	VA451-1
1/8" Drain Valve SC8225B003V	2	VA009-2
Emergency spares		
Muffler Element 2"		MUO57-1
Lamp LED green		IL057-2
Lamp LED yellow		IL057-3
Gauge 0-100psig		GA052-1
1 1/2 "EQ Valve & Operator		VA429-3
SOL Valve for Operators Feed valve, EQ valve & Waste Valve		VA444-1
2 1/2" Waste Valve & Operators		VA447-1
2" Feed Valve & Operator		VA446-1
Rebuild kit for 3 way valve operators		VA452-1
3 Amp Fuse		FU004-1
2 Amp Fuse		FU015-1
.5 Amp Fuse		FU024-1
3/4" Check Valve		VA027-3
MagnaLube		PS211-1

D Appendix Component Literature

Programmable Logic Controller

- Allen-Bradley
  Micrologix 1200
  Programmable Logic Controller (PLC)
  Data Sheet

Filters

- Wilkerson Corporation
  ½" FPT, Type C
  MICROalescer Filter
  Installation and Maintenance Sheet

- Standard Filter
  ½", ¾" and 1" FPT, 83-531-000 REV 1
  Installation and Maintenance Sheet

- Wilkerson Corporation
  ¾ " FPT, Type C
  MICROalescer Filter
  Installation and Maintenance Sheet

- Wilkerson Corporation
  Filter Model M32
  Installation and Maintenance Sheet

- Wilkerson Corporation
  Filter Model F35
  Installation and Maintenance Sheet

- Wilkerson Corporation
  Filter Model M35
  Installation and Maintenance Sheet

Regulators

- Wilkerson Corporation
  ½" FPT, Flow Regulator
  Installation and Maintenance Sheet

- Wilkerson Corporation
  ¾" FPT, Dial-Air™ Regulator
  Installation and Maintenance Sheet

- Wilkerson Corporation
  Dial-Air™ Regulator
  Installation and Maintenance Sheet

Pressure Transducer

- MSI Sensors
  MSP 300
  Specification Sheet

Valves

- Neles-Jamesbury
  ½-inch–2-inch Series 4000
  3 Piece Ball Valves
  Installation, Maintenance and Operating Instructions

- ASCO Valves
  1/8", ¼", or 3/8" NPT Solenoid Valves
  Series 8262 and 8263
  Installation and Maintenance Instructions

- ASCO Valves
  Open-Frame Solenoids
  Series U8003 and US8003
  Installation and Maintenance Instructions

- ASCO Valves
  3/8", ½" and ¾" Solenoid Valves
  Series 8210 and 8211
  Installation and Maintenance Instructions

- ASCO Valves
  1", 1 –1/4" and 1-1/2" Solenoid Valves
  Series 8210 and 8211
  Installation and Maintenance Instructions

- ASCO Valves
  Red-Hat II
  Series 8017G and 8014
  Installation, Maintenance and Operating Instructions

- ASCO Valves
  2-way Auxiliary-Operated Pilot
  Controlled Piston Valves
  Series 8290
  Installation and Maintenance Instructions

- Banjo
  Direct Mounted Control Solenoid Valve
  Installation Instructions

Magnalube-G

- Saunders Enterprises, Inc.
  Grease for Feed Air Regulators
  Material Safety Data Sheet

MicroLogix 1200 Controllers

Controller Specifications

The following tables summarize the specifications for MicroLogix 1200 controllers.

Table 1 Controller General Specifications

Specification	All 1762 Controllers
Memory Size and Type	6K flash memory: 4K user program, 2K user data
Data Elements	configurable, user-defined file structure, 2K max. data size
Throughput	2 ms (for a typical 1K word user program)(1)

(1) A typical user program contains bit, timer, counter, math and file instructions.

Figure 2 Catalog Number Detail

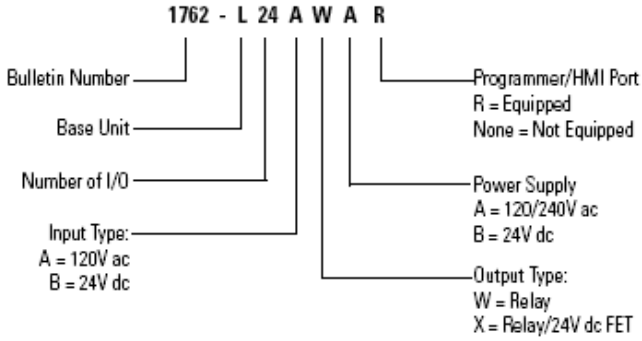

Table 3 Controller Power and I/O Configuration

Line Power	Inputs	Outputs	High Speed I/O	Catalog Number
120/240V ac	(14) 120V ac	(10) Relay	n/a	1762-L24AWA, -L24AWAR
120/240V ac	(24) 120V ac	(16) Relay	n/a	1762-L40AWA, -L40AWAR
120/240V ac	(10) Standard 24V dc (4) Fast 24V dc	(10) Relay	(4) 20 kHz input	1762-L24BWA, -L24BWAR
120/240V ac	(20) Standard 24V dc (4) Fast 24V dc	(16) Relay	(4) 20 kHz input	1762-L40BWA, -L40BWAR
24V dc	(10) Standard 24V dc (4) Fast 24V dc	(5) Relay (4) Standard 24V dc FET (1) Fast 24V dc FET	(4) 20 kHz input (1) 20 kHz output	1762-L24BXB, -L24BXBR
24V dc	(20) Standard 24V dc (4) Fast 24V dc	(8) Relay (7) Standard 24V dc FET (1) Fast 24V dc FET	(4) 20 kHz input (1) 20 kHz output	1762-L40BXB, -L40BXBR

Table 4 Controller Power Supply Specifications

Specification		1762-					
		L24AWA, L24AWAR	L40AWA, L40AWAR	L24BWA, L24BWAR	L40BWA, L40BWAR	L24BXB, L24BXBR	L40BXB, L40BXBR
Power Supply Voltage		85 to 265V ac at 47 to 63 Hz				20.4 to 26.4V dc Class 2 SELV	
Power Consumption		68 VA	80 VA	70 VA	82 VA	27W	40W
Power Supply Inrush Current (max.)		120V ac: 25A for 8 ms 240V ac: 40A for 4 ms				24V dc: 15A for 20 ms	24V dc: 15A for 30 ms
Maximum Load Current[1]	5V dc	400 mA	600 mA	400 mA	600 mA	400 mA	600 mA
	24V dc	350 mA	500 mA	350 mA	500 mA	350 mA	500 mA
Maximum Load Power		10.4W	15W	12W	16W	10.4W	15W
24V dc Sensor Power		n/a	n/a	250 mA, 400 µF capacitance max.	400 mA, 400 µF capacitance max.	n/a	n/a

(1) See System Expansion Calculations on page 26 for an example system validation worksheet to calculate expansion I/O power usage.

Figure 5 DC Input Power Requirements for BXB Units

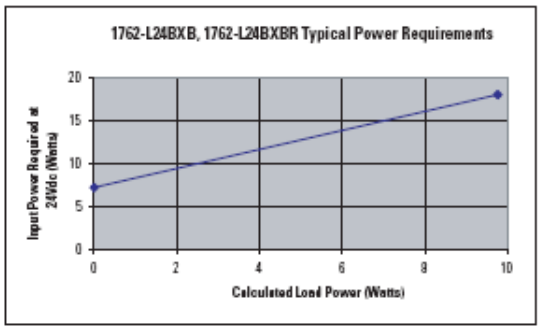

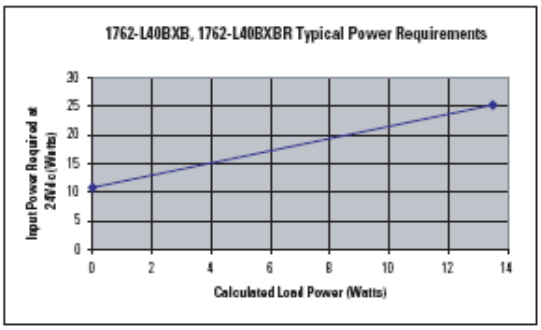

Table 6 Controller Input Specifications

Specification	1762-L24AWA, -L24AWAR 1762-L40AWA, -L40AWAR	1762-L24BWA, -L24BXB, -L40BWA, -L40BXB 1762-L24BWAR, -L24BXBR, -L40BWAR, -L40BXBR	
		Inputs 0 through 3	Inputs 4 and higher
On-State Voltage Range	79 to 132V ac at 47 Hz to 63 Hz	14 to 26.4V dc at 55°C (131°F) 14 to 30.0V dc at 30°C (86°F)	10 to 26.4V dc at 55°C (131°F) 10 to 30.0V dc at 30°C (86°F)
Off-State Voltage Range	0 to 20V ac	0 to 5V dc	
Operating Frequency	n/a	0 Hz to 20 kHz	0 Hz to 1 kHz (scan time dependent)
Signal Delay (max.)	ON Delay = 20 ms OFF Delay = 20 ms	standard inputs: selectable from 0.5 to 16 ms high-speed inputs: selectable from 0.025 to 16 ms	
On-State Current: Minimum Nominal Maximum	 5.0 mA at 79V ac 12 mA at 120V ac 16.0 mA at 132V ac	 2.5 mA at 14V dc 7.3 mA at 24V dc 12.0 mA at 30V dc	 2.0 mA at 10V dc 8.9 mA at 24V dc 12.0 mA at 30V dc
Off-State Leakage Current (max.)	2.5 mA max.	1.5 mA min.	
Nominal Impedance	12K Ω at 50 Hz 10K Ω at 60 Hz	3.3K Ω	2.7K Ω
Maximum Inrush Current	250 mA at 120V ac	n/a	

Table 7 Controller Digital Output Specifications

Specification	1762-		
	L24AWA, L24BWA, L24BXB, L40AWA, L40BWA, L40BXB, L24AWAR, L24BWAR, L24BXBR, L40AWAR, L40BWAR, L40BXBR	L24BXB, -L40BXB L24BXBR, -L40BXBR	
	Relay	FET Standard Operation	FET High-Speed Operation (Output 2 only)
Operating Voltage Range	5 to 125V dc 5 to 264V ac	21.6 to 27.6V dc	21.6 to 27.6V dc
Continuous Current per Point (max.)	See Table 8, Relay Contact Rating.	See Figure 9, FET Standard Outputs Continuous Current per Point (max.).	100 mA
Continuous Current per Common (max.)	8.0A	7.5A for L24BXB, L24BXBR 8.0A for L40BXB, L40BXBR	
Continuous Current per Controller (max.)	30A or total of per-point loads, whichever is less at 150V max. 20A or total of per-point loads, whichever is less at 240V max.		
On-State Current (min.)	10.0 mA	1 mA	10.0 mA
Off-State Leakage Current (max.)	0 mA	1 mA	
Signal Delay (max.) - resistive load	ON Delay = 10 ms OFF Delay = 10 ms	ON Delay = 0.1 ms OFF Delay = 1.0 ms	ON Delay = 6 µs OFF Delay = 18 µs
Surge Current per Point (peak)	n/a	4A for 10 ms(1)	

(1) Repeatability is once every 2 seconds at +55°C (+131°F), once every 1 second at +30°C (+86°F).

Table 8 Relay Contact Rating

Maximum Voltage	Amperes		Amperes Continuous	Voltamperes	
	Make	Break		Make	Break
240V ac	7.5A	0.75A	2.5A	1800 VA	180 VA
120V ac	15A	1.5A			
125V dc	0.22A(1)		1.0A	28 VA	
24V dc	1.2A(1)		2.0A		

(1) For dc voltage applications, the make/break ampere rating for relay contacts can be determined by dividing 28 VA by the applied dc voltage. For example, 28 VA/48V dc = 0.58A. For dc voltage applications less than 48V, the make/break ratings for relay contacts cannot exceed 2A. For dc voltage applications greater than 48V, the make/break ratings for relay contact cannot exceed 1A.

6-1

WILKERSON CORPORATION

MICROalescer® Filter

MANUFACTURER'S WARRANTY

Manufacturer's products are warranted to be free from defects in material and workmanship under proper use, installation, application and maintenance in accordance with manufacturer's written recommendations and specifications for one year from the date of shipment from the factory. Manufacturer's obligation under this warranty is limited to and the sole remedy for any such defect shall be the repair or replacement (at manufacturer's option) of unaltered products returned to manufacturer and proven to have such defect, provided such defect is promptly reported to manufacturer within said one year period.

THIS IS THE ONLY AUTHORIZED MANUFACTURER'S WARRANTY AND IS IN LIEU OF ALL OTHER EXPRESS OR IMPLIED WARRANTIES OR REPRESENTATIONS, INCLUDING ANY IMPLIED WARRANTIES OF MERCHANTABILITY OR FITNESS, OR OF ANY OTHER OBLIGATIONS ON THE PART OF MANUFACTURER. Warranty claims must be submitted and shall be processed in accordance with manufacturer's established warranty claim procedure. In no event will manufacturer be liable for business interruptions, loss of profits, personal injury, costs of delay or for any other special indirect, incidental or consequential losses, costs or damages.

⚠ WARNING ⚠

USE LIMITATIONS

Manufacturer's warranties are void and manufacturer assumes no responsibility for any resulting cost, loss injury or any other damages whatsoever with respect to any plastic bowl unit for which a bowl guard is standard equipment if the unit is placed in service without the bowl guard and except as otherwise specified in writing by manufacturer with respect to any manufacturer's products which are used in other than compressed air service. Specific warnings with respect to these and other use limitations appear elsewhere in this product instruction sheet.

ATTENTION: Make sure bowl is fully inserted into body, and then fully turned to lock bowl in place before applying air pressure to unit. When bowl is properly installed, the alignment markings on the bowl/bowlguard assembly and the marks on the body will line up, indicating proper assembly. Failure to do so may cause air pressure to blow bowl off of unit, resulting in serious personal injury or death. Depressurize unit before attempting to service.

YOU have selected a quality product, and we appreciate it... To be assured of maximum performance and satisfaction please read these instructions before installing this product.

WARNING: IF YOUR UNIT HAS A PLASTIC BOWL:

1. **DO NOT** use plastic bowl units without a bowl guard installed.* Plastic bowl units are sold only with bowl guards to minimize the danger of flying fragments in the event of bowl failure. If this unit is in service without a bowl guard installed, manufacturer's warranties are void, and the manufacturer assumes no responsibility for any resulting loss. **(*EXCEPT M00 MODEL)**
2. **DO NOT** install the unit where it will be subjected to temperatures higher than 125°F (52°C).
3. **DO NOT** install the unit where it will be subjected to pressures higher than 150 psig (10,3 bar).
4. **CAUTION:** Certain compressor oils, household cleaners, chemicals, solvents, paints and fumes will attack plastic bowls and can cause plastic bowl failure. See manufacturer's list shown elsewhere on this sheet.
5. **WHEN BOWL** becomes dirty replace bowl or wipe only with a clean, dry cloth.
6. **DO NOT** install on a compressed air line where the compressor is lubricated with, or the air contains, a material that will attack plastic bowls.
7. **DO** inspect plastic bowls to detect crazing, cracking, damage or other deterioration. Immediately replace any crazed, cracked, damaged or deteriorated bowl with a metal bowl or a new plastic bowl and bowl guard.
8. **IF A UNIT HAS BEEN IN SERVICE AND DOES NOT HAVE A BOWL GUARD, ORDER ANOTHER ONE AND INSTALL BEFORE PLACING BACK IN SERVICE.**

IMPORTANT INSTALLATION INSTRUCTIONS FOR MICROALESCER® FILTERS (TYPE C)

1. **DO NOT** install the unit until you have read this entire product information sheet. If your unit has a plastic bowl, note the special warning information listed above.
2. **EXCEPT** as otherwise specified by manufacturer, this product is specifically designed for compressed air service, and use with any other fluid (liquid or gas) is a misapplication. For example, use with or injection of certain hazardous liquids or gases in the system (such as alcohol or liquid petroleum gas) could be harmful to the unit or result in a combustible condition or hazardous external leakage. Before using with fluids other than air, or for non-industrial applications, or for life support systems, consult manufacturer for written approval. Manufacturer's warranties are void in the event of misapplication and manufacturer assumes no responsibility for any resulting loss. Maximum pressure and temperature ratings for plastic bowls are 150 psig (10,3 bar) and 125°F (52°C); and for metal bowls 200 psig (14 bar) and 175°F (79°C). [(08/18/28 Series-250 psig (17 bar) and 175°F (79°C)]
3. **INSTALL** as close as possible to point where air is being used.
4. **REDUCING THE PIPE SIZE** down to accommodate a smaller inlet/outlet pipe size of a MICROalescer® filter does not affect proper operation of filter. **DO NOT** select MICROalescer® filters by inlet and outlet port sizes. MICROalescer® filters should be selected by the airflow and inlet pressure required.
5. **INSTALL** a 5-micron prefilter ahead of the MICROalescer® filter to prolong life of the element.
6. **INSTALL** a pressure differential gauge (available from the manufacturer) to determine when to change the disposable elements, or install an air pressure gauge at inlet and another at outlet of MICROalescer® filter. When the pressure differential reaches 10 psig (0,7 bar), change the element.
7. **PURGE** all traces of oil on the downstream side of coalescing filter prior to installation.
8. **DO NOT INSTALL** MICROalescer® filter on an air line if there are any chemicals in the compressed air that will attack the polyurethane foam cover of the element.
9. **WHEN INSTALLING** filter element **DO NOT** touch the foam plastic cover. Always handle it by the end plates. DO NOT touch the MICROalescer® element once it has been placed in service. Pressure on the outer foam cover can damage it once it is in service.
10. **WHEN INSTALLING** a chemical dryer, mount it after the MICROalescer® filter.
11. **WHEN INSTALLING** a refrigerated air dryer, it may be installed before a MICROalescer® filter. (See schematic elsewhere in these instructions.)
12. **WHEN INSTALLING** a Type D filter with an AC Pak element (Activated Carbon for oil vapor adsorption), mount filter after air dryer.
13. DO NOT INSTALL a quick-opening valve if this causes a flow surge beyond the flow rating of the unit.

WHEN TO CHANGE THE TYPE C ELEMENT

1. **CHANGE ELEMENT** when pressure differential reaches 10 psig (0,7 bar). Units with differential pressure indicator will move to red at 10 psid.
2. **DO NOT** change element if oil stains appear on lower 1/5 of element. This is normal; oil or water stains on the outer foam cover do not indicate a need to change the element.
3. **WHEN INSTALLING** element using bottom retainer nut, tighten nut to 5-6 ft. lbs.
4. DO NOT use oils or grease on element or bowl seals. NOTE: Only excessive pressure drop requires the replacement of the element. Excessive pressure drop indicates that the filter has been removing solid contaminants as well as oil and water particulates.

TROUBLE-SHOOTING MICROALESCER® FILTER INSTALLATIONS

IF OIL AEROSOLS APPEAR DOWNSTREAM FROM MICROALESCER® FILTER

1. This could indicate lines were not properly purged of previous contaminants.
2. Check to see if sealing gasket/o-ring (depending on model) is in place and making proper seal between the top of the element and the cover casting. Make sure element is tightened firmly in place.
3. Make sure you are not flowing more air through the unit than its rated capacity. Momentary high flows could cause oil bypass.
4. For maximum efficiency, air inlet temperature should be between 70°F (21°C) and 90°F (32°C).
5. If inlet temperatures up to the maximum of 125°F (52°C) cannot be avoided, install the Type C filter with a Type D element downstream. This will catch the oil vapors that are usually responsible for oil downstream at higher temperatures. Check that compressor is not drawing air at the intake contaminated with harmful chemicals or hydrocarbons.
6. If the foam sock is torn or ruptured, oil may pass downstream from the element. If this should occur, replace the element.
7. In compressors which have been running for a long time without changing of oil, most oils will gradually change their chemical compositions and may develop impurities which attack the plastic bowl, filter seals, or outer foam sock. Periodic replacement of the compressor oil will prevent this occurrence and extend compressor life.

FRENCH CANADIAN

VOUS avez choisi un produit de qualité et nous l'apprécions. Pour être assuré d'obtenir des performances et un fonctionnement parfait, lisez ces instructions avant l'installation de notre matériel.

ATTENTION: SI VOTRE APPAREIL A UN BOL PLASTIQUE

1. **NE PAS** utiliser les unités à bol en plastique sur lesquelles il n'y pas de dispositif de protection installé.* Toutes les unités à bol en plastique sont vendues équipées d'un dispositif de protection afin de minimiser le danger que présente la projection de fragments résultant de l'éclatement du bol. La mise en service de cette unité sans dispositif de protection installé annule les garanties accordées par le fabricant. Le fabricant décline alors toute responsabilité pour toute perte qui en résulterait. **(*SAUF MODÈLE M00)**
2. **NE PAS** installer l'appareil dans un endroit où la température est supérieure à 52°C.
3. **NE PAS** utiliser l'appareil à des pressions supérieures à 10,3 bar.
4. **ATTENTION:** certains huiles de compresseur, produits d'entretien, produits chimiques, solvants, peintures et vapeurs, attaquent les bols plastiques et sont cause de détérioration. Voir la liste sur cette feuille. à ne pas utiliser à proximité de ces produits.
5. **QUAND LE BOL** devient sale le remplacer ou le nettoyer avec un chiffon propre et sec.
6. **NE PAS** installer l'appareil sur une ligne d'air comprimé où le compresseur est lubrifié avec un produit qui attaque les bols plastiques, ou si l'air en contient.
7. **INSPECTER** pour détecter fêlures, craquelures ou autres détériorations. Remplacer immédiatement tout bol fêlé, craquelé, endommagé ou détérioré par un bol métal ou un nouveau bol plastique avec bol de protection métallique.
8. **SI UNE UNITÉ MISE EN SERVICE NE POSSÈDE PAS DE DISPOSITIF DE PROTECTION, COMMANDEZ-EN UN ET INSTALLEZ-LE AVANT DE CONTINUER À VOUS SERVIR DE L'UNITÉ.**

INSTRUCTIONS IMPORTANTES POUR L'INSTALLATION DES FILTRES SUBMICRONIQUES.

1. **NE PAS** installer l'appareil sans avoir préalablement lu la présente notice d'installation. Si l'appareil a un bol en plastique, tenir compte des avertissements spéciaux ci-haut.
2. **SAUF** spécifications contraires du constructeur, cet appareil est prévu pour l'air comprimé, un emploi avec

83-536-000 9/98
Printed in U.S.A.

1. **NO** instale la unidad hasta que haya leído completamente esta hoja de información sobre el producto. Si su unidad tiene una taza de plástico, observe la información de precauciones especiales indicada anteriormente.
2. **SALVO** que el fabricante especifique lo contrario, este producto está diseñado específicamente para el uso con aire comprimido, y su uso con cualquier otro fluido (líquido o gas) es una aplicación indebida. Por ejemplo, el uso con o la inyección de ciertos líquidos o gases peligrosos en el sistema (tales como el alcohol o el gas de petróleo líquido) podría ser nocivo para la unidad o resultar en una condición de combustión o una fuga externa peligrosa. Antes de utilizar con fluidos que no sean aire, para aplicaciones no industriales, o para sistemas de soporte de vida, consulte al fabricante para obtener una aprobación por escrito. Las garantías del fabricante no tendrán validez en el caso de aplicación indebida y éste no asume ninguna responsabilidad por cualquier pérdida resultante. Los valores máximos de presión y temperatura de las tazas de plástico son 150 lbs/pulgada2 (10,3 barias) y 125°F (52°F); y de las tazas de metal 200 lbs/pulgada2 (14 barias) y 175°F (79°C). [(Serie 08/18/28-250 lbs/pulgada2 (17 barias) y 175°F (79°C)]
3. **INSTALE** el producto lo más cerca posible del punto donde se está utilizando el aire.
4. **REDUCIR EL TAMAÑO DEL CAÑO** para acomodar un caño de entrada/salida de tamaño más pequeño de un filtro MICROalescer® no afecta el buen funcionamiento del filtro. **NO** seleccione los filtros MICROalescer® por los tamaños de orificio de entrada y salida. Los filtros MICROalescer® se deben seleccionar por el flujo de aire y la presión de entrada requeridos.
5. **INSTALE** un prefiltro de 5 micrones delante del filtro MICROalescer® para prolongar la vida útil del elemento.
6. **INSTALE** un manómetro diferencial (disponible del fabricante) para determinar cuándo cambiar los elementos desechables o instale un manómetro en la entrada y otro en la salida del filtro MICROalescer®. Cuando la diferencia de presiones llegue a 10 lbs/pulgada2 (0,7 barias), cambie el elemento.
7. **PURGUE** todos los vestigios de aceite dentro de los conductos antes de la instalación del filtro.
8. **NO INSTALE** el filtro MICROalescer® en una línea de aire si hubiera algún producto químico en el aire comprimido que dañe la cubierta de plástico celular de poliuretano del elemento.
9. **CUANDO INSTALE** el elemento de filtro, **NO** toque la cubierta de plástico celular. Siempre tómelo por las placas terminales. **NO** toque el elemento MICROnaught® una vez que se le haya puesto en uso. La presión sobre la cubierta de plástico celular exterior puede dañarlo una vez que esté en uso.
10. **CUANDO INSTALE** un secador químico, móntelo después del filtro MICROalescer®.
11. **CUANDO INSTALE** un secador de aire refrigerado, puede instalárselo antes de un filtro MICROalescer®. (Vea el esquema correspondiente en otra parte de estas instrucciones.)
12. **CUANDO INSTALE** un filtro de Tipo C con un elemento AC Pak (carbón activado para adsorción de vapor de aceite), monte el filtro después del secador de aire.
13. **NO INSTALE** una válvula de apertura rápida si ésto causara un flujo excesivo que sobrepase la capacidad de flujo de la unidad.

CUANDO SE DEBE CAMBIAR EL ELEMENTO DE TIPO C

1. **CAMBIE EL ELEMENTO** cuando la diferencia de presiones llegue a 10 lbs/pulgada2 (0,7 barias). Las unidades con indicador de diferencia de presiones se moverán al rojo a 0.7 barias.
2. **NO** cambie el elemento si aparecen manchas de aceite en la parte inferior equivalente a 1/5 del elemento. Ésto es normal; las manchas de aceite o agua en la cubierta de plástico celular exterior no indican una necesidad de cambiar el elemento.
3. **CUANDO INSTALE** el elemento utilizando la tuerca inferior de sujeción, apriete la tuerca entre 5 y 6 libras/pie.
4. **NO** utilice aceites o grasa en el elemento o las juntas de la taza. NOTA: Sólo una caída excesiva de presión requiere el cambio del elemento. La caída excesiva de presión indica que el filtro ha filtrado contaminantes sólidos, así como partículas de aceite y agua.

LOCALIZACION DE FALLAS EN LAS INSTALACIONES DEL FILTRO

MICROALESCER® SI LOS AEROSOLES DE ACEITE APARECIERAN EN EL CIRCUITO DESPUES DEL FILTRO MICROALESCER®

1. Esto podría indicar que los conductos no fueron debidamente purgados de contaminantes anteriores.
2. Verifique que la junta obturadora/anillo tórico (según el modelo) esté en su lugar y que haya un sellado adecuado entre la parte superior del elemento y la tapa moldeada. Asegúrese de que el elemento esté sujetado firmemente en su lugar.
3. Controle que el flujo de aire a través de la unidad no sea superior a su capacidad. Los flujos elevados momentáneos podrían ser la causa de un paso de aceite.
4. Para una mayor eficiencia, la temperatura de entrada del aire debe ser entre 70°F (21°C) y 90°F (32°C).
5. Si no pueden evitarse las temperaturas de entrada de hasta el máximo de 125°F (52°C), instale el filtro de Tipo C con un elemento de Tipo D. Esto captará los vapores de aceite que normalmente son responsables del aceite que aparece a temperaturas más altas. Verifique que el compresor no esté aspirando en la entrada, aire contaminado con productos químicos nocivos.
6. Si la funda de espuma está rasgada o rota, el aceite podría filtrarse desde el elemento. Si ocurriera esto, cambie el elemento.
7. En compresores que han estado funcionando durante largo tiempo sin cambiarle el aceite, la mayoría de los aceites cambiarán gradualmente sus composiciones químicas y pueden acumular impurezas que dañan a la taza de plástico, las juntas de los filtros o la funda exterior de espuma. El cambio periódico del aceite del compresor evitará que esto suceda y prolongará la vida útil del compresor.

SOME OF THE MATERIALS THAT WILL ATTACK POLYCARBONATE PLASTIC BOWLS.

Acetaldehyde
Acetic acid (conc.)
Acetone
Acrylonitrile
Ammonia
Ammonium flouride
Ammonium hydroxide
Ammonium sulfide
Anaerobic adhesives and sealants
Antifreeze
Benzene
Benzoic acid
Benzyl alcohol
Brake fluids
Bromobenzine
Butyric acid
Carbolic acid
Carbon disulfide
Carbon tetrachloride
Caustic potash solution
Caustic soda solution
Chlorobenzine
Chloroform
Cresol
Cyclohexanol
Cyclohexanone
Cyclohexene
Dimethyl formamide
Dioxane
Ethane tetrachlonde
Ethyl acetate
Ethyl ether
Ethylamine
Ethylene chlorohydrin
Ethylene dichloride
Ethylene glycol
Formaic acid (conc.)
Freon (refrig.and propell)
Gasoline (high aromatic)
Hydrazine
Hydrochloric acid (conc.)
Methylene chloride
Methylene salicylate
Milk of lime (CaOH)
Nitric acid(conc.)
Nitrobenzine
Nitrocellulose laquer
Perchlorethylene
Phenol
Phosphorous hydroxy chloride
Phosphorous trichloride
Propionic acid
Pyridine
Sodium hydroxide
Sodium sulfide
Styrene
Sulfuric acid (conc.)
Sulphural chloride
Thiophene
Toluene
Turpentine
Sulfuric acid (conc.)
Sulphural chloride
Tetrahydronaphtalene
Thiophene
Toluene
Turpentine
Xylene and others

TRADE NAMES OF SOME COMPRESSOR OILS, RUBBER COMPOUNDS AND OTHER MATERIALS THAT WILL ATTACK POLYCARBONATE PLASTIC BOWLS

Atlas "Perma-Guard"
Buna N "
Cellulube #510 and #250
Crylex #5 cement
"Eastman 910
Garlock #98403 (polyurethane)
Haskel #568-023
Hilgard Co's hil phene
Houghton and Co. oil #1120, #1130 & #1055
Houtosafe 1000
Kano Kroil
Keystone penetrating oil #2
Marvel Mystery Oil
Minn. Rubber 366Y
National Compound #N11
"Nylock" VC 3
Parco #1306 Neoprene
Petron PD287
Prestone
Pydraul AC
Sears Regular Motor Oil
Sinclair oil "Lily White"
Some Loctite Compounds
Stillman #269-75 (polyurethane)
Stillman #SR-513 (neoprene)
Stauffer Chemical FYROQUEL #150
Tannergas
Telar
Tanneco anderol #495 and #500 oils
Tifon
Zerex

WE CANNOT POSSIBLY LIST ALL HARMFUL SUBSTANCES, CHECK WITH A MOBAY CHEMICAL OR GENERAL ELECTRIC OFFICE FOR FURTHER INFORMATION ON POLYCARBONATE PLASTIC

LISTA DE MATERIALES QUE DAÑAN LAS TAZAS DE PLASTICO DE POLICARBONATO

Acetaldehido
Acetato etílico
Acetona
Acido acético (conc.)
Acido benzoico
Acido butírico
Acido carbólico
Acido clorhídrico (conc.)
Acido formaico (conc.)
Acido nítrico (conc.)
Acido propiónico
Acido sulfúrico (conc.)
Acrilonitrilo
Adhesivos y compuestos obturadores anaeróbicos
Alcohol bencílico
Amoníaco
Anticongelante
Benceno
Bromobenceno
Ciclohexano
Ciclohexanol
Ciclohexanona
Clorobenceno
Cloroformo
Clorohidrina de etileno
Cloruro de azufre
Cloruro de metileno
Creosol
Dicloruro de etileno
Dimetil formamida
Dioxano
Disulfuro de carbono
Estireno
Eter etílico
Etilamina
Fenol
Fluoruro amónico
Freón (refrig. y propelente)
Gasolina (altamente aromática)
Glicol etilénico
Hidrazina
Hidroxicloruro de fósforo
Hidróxido amónico
Hidróxido sódico
Laca nitrocelulosa
Lechada de cal (CaOH)
Líquidos para frenos
Nitrobenceno
Percloretileno
Piridina
Salicilato de metileno
Solución de potasa cáustica
Solución de soda cáustica
Sulfuro amónico
Sulfuro sódico
Tetracloruro de carbono
Tetracloruro de etano
Tetrahidronaftaleno
Tiofeno
Tolueno
Trementina
Tricloruro de fósforo
Xileno y otros

NOMBRES COMERCIALES DE ALGUNOS LUBRICANTES PARA COMPRESORES, COMPUESTOS DE CAUCHO Y OTROS MATERIALES QUE DAÑAN LAS TAZAS DE PLASTICO DE POLICARBONATO

Aceite #1120, #1130 y #1055 de Houghton y Co.
Aceite Marvel Mystery
Aceite penetrante Keystone #2
Aceite Sinclair "Lily White"
Aceites Tenneco anderol #495 y #500
Algunos compuestos Loctite
Atlas "Perma-Guard"
Buna N
Caucho Minn 366 y Cellulube #510 y #250
Cemento Crylex #5
Eastman 910
Garlock #98403 (poliuretano)
Haskel #568-023
Hilgard Co's hil phene
Houtosafe 1000
Kano Kroil
National Compound #N11
Neopreno Parco #1306
Nylock* VC-3
Petron PD287
Prestone
Pydraul AC
Aceite de motor regular Sears
Stauffer Chemical FYRQUEL #150
Stillman #269-75 (poliuretano)
Stillman #SR-513 (neopreno)
Tannergas
Telar
Titon
Zerex

OBVIAMENTE, NO PODEMOS LISTAR TODAS LAS SUSTANCIAS NOCIVAS; CONSULTE A UNA OFICINA DE MOBAY CHEMICAL O DE GENERAL ELECTRIC PARA OBTENER MAS INFORMACION SOBRE EL PLASTICO DE POLICARBONATO

Typical Installation • Exemple d'installation • Typische Installation • Installazione tipica • Instalación normal

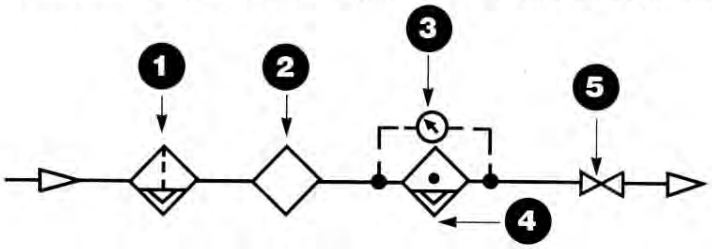

1. PREFILTER / PRÉFILTRE / VORFILTER / PREFILTRO / PREFILTRO
2. REFRIGERATED AIR DRYER / SÉCHEUR PAR RÉFRIGÉRATION / KÜHL TROCKNER / ESSICCATORE A REFRIGERAZIONE / SECADOR DE AIRE REFRIGERADO
3. DIFFERENTIAL PRESSURE GAUGE / MANOMÈTRE DIFFÉRENTIEL / DIFFERENTIALDRUCK-MANOMETER / MANOMETRO DIFFERENZIALE / MANOMETRO DIFERENCIAL
4. MICROALESCER® FILTER WITH MICRONAUGHT® ELEMENT / FILTRE SUBMICRONIQUE AVEC CARTOUCHE MICRONAUGHT® / MICROALESCER®-FILTER MIT MICRONAUGHT®-ELEMENT / FILTRO MICROALESCER® CON ELEMENTO MICRONAUGHT® / FILTRO MICROALESCER® CON ELEMENTO MICRONAUGHT®
5. VALVE / SOUPAPE / VENTIL / VALVOLA / VALVULA

MICROalescer® Filter Combination • Combinaison Filtre MICROalescer® • MICROalescer®-Filter-Kombination Combinazione Filtro MICROalescer® • Combinación de Filtros MICROalescer®

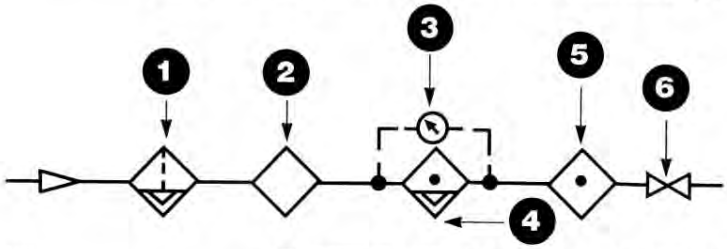

1. PREFILTER / PRÉFILTRE / VORFILTER / PREFILTRO / PREFILTRO
2. REFRIGERATED AIR DRYER / SÉCHEUR PAR RÉFRIGÉRATION / KÜHL TROCKNER / ESSICCATORE A REFRIGERAZIONE / SECADOR DE AIRE REFRIGERADO
3. DIFFERENTIAL PRESSURE GAUGE / MANOMÈTRE DIFFÉRENTIEL / DIFFERENTIALDRUCK-MANOMETER / MANOMETRO DIFFERENZIALE / MANOMETRO DIFERENCIAL
4. ELEMENT MICRO NAUGHT® / ÉLÉMENT MICRONAUGHT® / ELEMENTO MICRONAUGHT® / ELEMENTO MICRONAUGT®
5. ELEMENT ODERNAUGHT® / ÉLÉMENT ODERNAUGHT® / ELEMENTO ODERNAUGHT® / ELEMENTO ODERNAUGT®
4. VALVE / SOUPAPE / VENTIL / VALVOLA / VALVULA

ENGLISH

WARNING

ATTENTION: Make sure bowl is fully inserted into body, and then fully turned to lock bowl in place before applying air pressure to unit. When bowl is properly installed, the alignment markings on the bowl/bowlguard assembly and the marks on the body will line up, indicating proper assembly. Failure to do so may cause air pressure to blow bowl off of unit, resulting in serious personal injury or death. Depressurize unit before attempting to service.

WARNING: IF YOUR UNIT HAS A PLASTIC BOWL

1. **DO NOT** use plastic bowl units without a bowl guard installed.* Plastic bowl units are sold only with bowl guards to minimize the danger of flying fragments in the event of bowl failure. If this unit is in service without a bowl guard installed, manufacturer's warranties are void, and the manufacturer assumes no responsibility for any resulting loss. **(*EXCEPT F00, F08 MODEL)**
2. **DO NOT** install the unit where it will be subjected to temperatures higher than 125°F (52°C).
3. **DO NOT** install the unit where it will be subjected to pressures higher than
150 psig (10,3 bar).
4. **CAUTION**: Certain compressor oils, household cleaners, chemicals, solvents, paints and fumes will attack plastic bowls and can cause plastic bowl failure. See manufacturer's list shown elsewhere on this sheet. Do not use near these materials.
5. **WHEN BOWL** becomes dirty replace bowl or wipe only with a clean, dry cloth.
6. **DO NOT** install on a compressed air line where the compressor is lubricat-
ed with, or the air contains, a material that will attack plastic bowls.
7. **DO** inspect plastic bowls to detect crazing, cracking, damage or other deterioration. Immediately replace any crazed, damaged or deteriorated bowl with a metal bowl or a new plastic bowl and bowl guard.
8. **IF A UNIT HAS BEEN IN SERVICE AND DOES NOT HAVE A BOWL GUARD, ORDER ANOTHER ONE AND INSTALL BEFORE PLACING BACK IN SERVICE.**

SOME OF THE MATERIALS THAT WILL ATTACK POLYCARBONATE PLASTIC BOWLS.

Acetaldehyde	Bromobenzene	Ethane tetrachloride	Methylene salicylate	Styrene
Acetic acid (conc.)	Butyric acid	Ethyl acetate	Milk of lime (CaOH)	Sulfuric acid (conc.)
Acetone	Carbolic acid	Ethyl ether	Nitric acid(conc.)	Sulphural chloride
Acrylonitrile	Carbon disulfide	Ethylamine	Nitrobenzene	Thiophene
Ammonia	Carbon tetrachloride	Ethylene chlorohydrin	Nitrocellulose laquer	Toluene
Ammonium flouride	Caustic potash solution	Ethylene dichloride	Perchlorethylene	Turpentine
Ammonium hydroxide	Caustic soda solution	Ethylene glycol	Phenol	Sulfuric acid (conc.)
Ammonium sulfide	Chlorobenzene	Formic acid (conc.)	Phosphorous hydroxy chloride	Sulphural chloride
Anaerobic adhesives and sealants	Chloroform	Freon (refrig and propell)	Phosphorous trichloride	Tetrahydronaphtalene
Antifreeze	Cresol	Gasoline (high aromatic)	Propionic acid	Thiophene
Benzene	Cyclohexanol	Hydrazine	Pyridine	Toluene
Benzoic acid	Cyclohexanone	Hydrochloric acid (conc.)	Sodium hydroxide	Turpentine
Benzyl alcohol	Cyclohexene	Methylene chloride	Sodium sulfide	Xylene and others
Brake fluids	Dimethyl formamide			
	Dioxane			

TRADE NAMES OF SOME COMPRESSOR OILS, RUBBER COMPOUNDS AND OTHER MATERIALS THAT WILL ATTACK POLYCARBONATE PLASTIC BOWLS

Atlas "Perma-Guard"	Houghton and Co. oil #1120, #1130 & #1055	Parco #1306 Neoprene	Stillman #SR 513 (neoprene)
Buna N	Houtosafe 1000	Petron PD287	Staufer Chemical FYROUEL #150
Cellulube #510 and #250	Kano Kroil	Prestone	Tannergas
Crylex #5 cement	Keystone penetrating oil #2	Pydraul AC	Telar
"Eastman 910	Marvel Mystery Oil	Sears Regular Motor Oil	Tenneco anderol #495 and #500 oils
Garlock #98403 (polyurethane)	Minn. Rubber 366Y	Sinclair oil "Lily White"	Titan
Haskel #568-023	National Compound #N11	Some Loctite Compounds	Zeres
Hilgard Co's hi phene	"Nylock" VC 3	Stillman #269-75 (polyurethane)	

WE CANNOT POSSIBLY LIST ALL HARMFUL SUBSTANCES. CHECK WITH A MOBAY CHEMICAL OR GENERAL ELECTRIC OFFICE FOR FURTHER INFORMATION ON POLYCARBONATE PLASTIC

IMPORTANT INSTALLATION INSTRUCTIONS FOR FILTERS

1. **DO NOT** install the unit until you have read this entire product information sheet. If your unit has a plastic bowl, note the special warning information that applies.
2. **EXCEPT** as otherwise specified by manufacturer, this product is specifically designed for compressed air service, and use with any other fluid (liquid or gas) is a misapplication. For example, use with or injection of certain hazardous liquids or gases in the system (such as alcohol or liquid petroleum gas) could be harmful to the unit or result in a combustible condition or hazardous external leakage. Manufacturer's warranties arevoid in the event of misapplication and manufacturer assumes no responsibility for any resulting loss. **Maximum pressure and temperature ratings for plastic bowls are 150 psig (10,3 bar) and 125°F (52°C); and for metal bowl 200 psig (14 bar) and 150°F (65.5°C). [(08/18/28 Series—250 psig (17 bar) and 175°F (79°C)]**
3. **INSTALL** as close as possible to point where air is being used.
4. **INSTALL** the same size unit as the pipe line in use. Avoid using fittings, couplings, etc., that restrict the airflow.
5. **IF** unit is equipped with a float in the bowl, the unit must be installed in a vertical position.
6. **IF UNIT** is a piston operated, automatic draining filter (has a brass stem with o-ring on it protruding through the bottom), install only before an intermittent-operated device that will allow an occasional stop or interruption of the airflow through the unit. It takes a least one second between flow cycles to assureproper operation of drain.

IMPORTANT MAINTENANCE INSTRUCTIONS FOR FILTERS

1. **BEFORE SERVICING THIS UNIT READ THIS ENTIRE PRODUCT INFORMATION SHEET.** If your unit has a plastic bowl, note the special warning information that applies.
2. **DEPRESSURIZE UNIT BEFORE REMOVING GUARD AND /OR BOWL.**
3. If it is a plastic bowl unit, inspect daily to detect crazing, cracking, damage or other deterioration. Immediately replace any crazed, cracked, damaged or deteriorated bowl with a new metal bowl or a new plastic bowl and bowl guard.
4. A. If unit has filter element, clean periodically by removing from filter, tapping on surface, and blowing off with air blowgun.
B. If unit has soft cloth element, replace with a new one at least every six months, or sooner if it looks dirty or causes excessive pressure drop 10 psig (0,7 bar) or more at rated flow.
5. A. If unit is equipped with a manual petcock, drain bowl at least once per work shift.
B. If unit is equipped with a float in the bowl, clean the bowl each time the element is cleaned or change by turning the bowl upside down and tapping onto tabletop. Blow clean with blow gun.
6. If bowl seal is crazed, cracked or otherwise damaged or deteriorated, replace with manufacturer's approved seal.
7. On plastic bowl units reinstall bowl guard before pressurizing.

INSTRUCTIONS IMPORTANTES POUR L'INSTALLATION DES FILTRES.

1. **NES PAS** installer l'appareil sans avoir préalablement lu la présente notice d'installation. Si votre appareil a un bol plastique, faire attention à la notice s'y rapportant.
2. **SAUF** spécifications contraires du constructeur, cet appareil est prévu pour l'air comprimé, un emploi avec d'autres fluides (liquides ou gaz) est contreindiqué. Par exemple, l'utilisation avec certains liquides ou gaz dangereux, ou leur injection, (tels que alcool, gaz de pétrole liquéfié) peut étre dangereux pour l'appareil ou peut entrainer des risques d'explosion ou des fuites dangereuses. Lors de l'utilisation d'autres fluides que l'air ou pour des applications non-industrielles ou pour des systemes respiratoires artificiels priere de consulter fabricant pour approbation ecrite. La pression et la température maximales pour un ból plastique sont (10,3) bar et 52°C, et pour un bol métal (14 bar) et (65,5°C). [08/18/28 Série 17 bar (250 psig et 79°C (175°F)].
3. **MONTER** aussi près que possible de l'utilisation.
4. **MONTER** un appareil du même raccordement que la tuyanterie. Eviter l'utilisation de reccords, coupleurs . . .réduisant le débit.
5. **SI L'APPAREIL** est equipé d'un flotteur, il doit être monté verticalement.
6. **SI L'APPAREIL** est à purge automatique à piston (tige laiton dépassant au fond du filtre) le monterseulement avant un appareil à fonctionnement intermittant qui aura des arrêts occasionnels ou qui stop-pera le débit dans le filtre. Il doit y avoir au moins 1 seconde entre deux cycles pour permettre un fonctionnement correcte du drain.

INSTRUCTIONS IMPORTANTES POUR POUR L'ENTRETIEN DES FITRES

1. **AVANT DE METTRE CET APPAREIL EN SERVICE LIRE ENTIERMENT CETTE NOTICE D'INFORMATION SUR LE PRODUIT.** Si votre appareil a un bol plastique, noter les informations spéciales qui s'y appliquent.
2. **DEPRESSURISER L'APPAREIL AVANT DE DEMONTER LE BOL.**
3. Si c'est un bol plastique, inspecter quotidiennement pour détecter fêlures, craquelures, dommages ou autres détériorations. Remplacez immédiatement tout bol rayé, craqué, endommagé ou détérioré par un bol en métal ou par un bol en plastique neuf avec son dispositif de protection.
4. A.Si l'appareil est équipé d'une cartouche en feutre, la nettoyer périodiquement en la retirant du filtre, en la tapant sur une surface dure et soufflant de l'air comprimé.
B.Si l'appareil est équipé d'une cartouche en flanelle, la remplacer tous les 6 mois, ou plus souvent si elle est sale ou entraine one perte de charge excessive (0,7 bar).
5. A.Si l'appareil est équipé d'une purge manuelle, purger l'appareil ou moins une fois par unité de travail.
B.Si l'appareil est équipé d'une purge automatique, la nettoyer en renversant le bol et en le tapant sur une surface d

WILKERSON®

83-536-000 REV 1 08/02

MICROalescer® Filter

MANUFACTURER'S WARRANTY

Manufacturer's products are warranted to be free from defects in material and workmanship under proper use, installation, application and maintenance in accordance with manufacturer's written recommendations and specifications for one year from the date of shipment from the factory. Manufacturer's obligation under this warranty is limited to and the sole remedy for any such defect shall be the repair or replacement (at manufacturer's option) of unaltered products returned to manufacturer and proven to have such defect, provided such defect is promptly reported to manufacturer within said one year period.

THIS IS THE ONLY AUTHORIZED MANUFACTURER'S WARRANTY AND IS IN LIEU OF ALL OTHER EXPRESS OR IMPLIED WARRANTIES OR REPRESENTATIONS, INCLUDING ANY IMPLIED WARRANTIES OF MERCHANTABILITY OR FITNESS, OR OF ANY OTHER OBLIGATIONS ON THE PART OF MANUFACTURER. Warranty claims must be submitted and shall be processed in accordance with manufacturer's established warranty claim procedure. In no event will manufacturer be liable for business interruptions, loss of profits, personal injury, costs of delay or for any other special indirect, incidental or consequential losses, costs or damages.

⚠ WARNING ⚠

USE LIMITATIONS

Manufacturer's warranties are void and manufacturer assumes no responsibility for any resulting cost, loss injury or any other damages whatsoever with respect to any plastic bowl unit for which a bowl guard is standard equipment if the unit is placed in service without the bowl guard and except as otherwise specified in writing by manufacturer with respect to any manufacturer's products which are used in other than compressed air service. Specific warnings with respect to these and other use limitations appear elsewhere in this product instruction sheet.

ATTENTION: Make sure bowl is fully inserted into body, and then fully turned to lock bowl in place before applying air pressure to unit. When bowl is properly installed, the alignment markings on the bowl/bowlguard assembly and the marks on the body will line up, indicating proper assembly. Failure to do so may cause air pressure to blow bowl off of unit, resulting in serious personal injury or death. Depressurize unit before attempting to service.

YOU have selected a quality product, and we appreciate it... To be assured of maximum performance and satisfaction please read these instructions before installing this product.

WARNING: IF YOUR UNIT HAS A PLASTIC BOWL:

1. **DO NOT** use plastic bowl units without a bowl guard installed.* Plastic bowl units are sold only with bowl guards to minimize the danger of flying fragments in the event of bowl failure. If this unit is in service without a bowl guard installed, manufacturer's warranties are void, and the manufacturer assumes no responsibility for any resulting loss. **(*EXCEPT M00 MODEL)**
2. **DO NOT** install the unit where it will be subjected to temperatures higher than 125°F (52°C).
3. **DO NOT** install the unit where it will be subjected to pressures higher than 150 psig (10,3 bar).
4. **CAUTION:** Certain compressor oils, household cleaners, chemicals, solvents, paints and fumes will attack plastic bowls and can cause plastic bowl failure. See manufacturer's list shown elsewhere on this sheet.
5. **WHEN BOWL** becomes dirty replace bowl or wipe only with a clean, dry cloth.
6. **DO NOT** install on a compressed air line where the compressor is lubricated with, or the air contains, a material that will attack plastic bowls.
7. **DO** inspect plastic bowls to detect crazing, cracking, damage or other deterioration. Immediately replace any crazed, cracked, damaged or deteriorated bowl with a metal bowl or a new plastic bowl and bowl guard.
8. **IF A UNIT HAS BEEN IN SERVICE AND DOES NOT HAVE A BOWL GUARD, ORDER ANOTHER ONE AND INSTALL BEFORE PLACING BACK IN SERVICE.**

IMPORTANT INSTALLATION INSTRUCTIONS FOR MICROALESCER® FILTERS (TYPE C)

1. **DO NOT** install the unit until you have read this entire product information sheet. If your unit has a plastic bowl, note the special warning information listed above.
2. **EXCEPT** as otherwise specified by manufacturer, this product is specifically designed for compressed air service, and use with any other fluid (liquid or gas) is a misapplication. For example, use with or injection of certain hazardous liquids or gases in the system (such as alcohol or liquid petroleum gas) could be harmful to the unit or result in a combustible condition or hazardous external leakage. Before using with fluids other than air, or for non-industrial applications, or for life support systems, consult manufacturer for written approval. Manufacturer's warranties are void in the event of misapplication and manufacturer assumes no responsibility for any resulting loss. Maximum pressure and temperature ratings for plastic bowls are 150 psig (10,3 bar) and 125°F (52°C); and for metal bowls 200 psig (14 bar) and 150°F (65,5°C). [(08/18/28 Series-250 psig (17 bar) and 150°F (65.5°C)]
3. **INSTALL** as close as possible to point where air is being used.
4. **REDUCING THE PIPE SIZE** down to accommodate a smaller inlet/outlet pipe size of a MICROalescer® filter does not affect proper operation of filter. **DO NOT** select MICROalescer® filters by inlet and outlet port sizes. MICROalescer® filters should be selected by the airflow and inlet pressure required.
5. **INSTALL** a 5-micron prefilter ahead of the MICROalescer® filter to prolong life of the element.
6. **INSTALL** a pressure differential gauge (available from the manufacturer) to determine when to change the disposable elements, or install an air pressure gauge at inlet and another at outlet of MICROalescer® filter. When the pressure differential reaches 7 psig (0,7 bar), change the element.
7. **PURGE** all traces of oil on the downstream side of coalescing filter prior to installation.
8. **DO NOT INSTALL** MICROalescer® filter on an air line if there are any chemicals in the compressed air that will attack the polyurethane foam cover of the element.
9. **WHEN INSTALLING** filter element **DO NOT** touch the foam plastic cover. Always handle it by the end plates. DO NOT touch the MICROalescer® element once it has been placed in service. Pressure on the outer foam cover can damage it once it is in service.
10. **WHEN INSTALLING** a chemical dryer, mount it after the MICROalescer® filter.
11. **WHEN INSTALLING** a refrigerated air dryer, it may be installed before a MICROalescer® filter. (See schematic elsewhere in these instructions.)
12. **WHEN INSTALLING** a Type D filter with an AC Pak element (Activated Carbon for oil vapor adsorption), mount filter after air dryer.
13. DO NOT INSTALL a quick-opening valve if this causes a flow surge beyond the flow rating of the unit.

WHEN TO CHANGE THE TYPE C ELEMENT

1. **CHANGE ELEMENT** when pressure differential reaches. Units with differential pressure indicator will move to red at 7 psid.
2. **DO NOT** change element if oil stains appear on lower 1/5 of element. This is normal; oil or water stains on the outer foam cover do not indicate a need to change the element.
3. **WHEN INSTALLING** element using bottom retainer nut, tighten nut to 5-6 ft. lbs.
4. DO NOT use oils or grease on element or bowl seals. NOTE: Only excessive pressure drop requires the replacement of the element. Excessive pressure drop indicates that the filter has been removing solid contaminants as well as oil and water particulates.

TROUBLE-SHOOTING MICROALESCER® FILTER INSTALLATIONS

IF OIL AEROSOLS APPEAR DOWNSTREAM FROM MICROALESCER® FILTER

1. This could indicate lines were not properly purged of previous contaminants.
2. Check to see if sealing gasket/o-ring (depending on model) is in place and making proper seal between the top of the element and the cover casting. Make sure element is tightened firmly in place.
3. Make sure you are not flowing more air through the unit than its rated capacity. Momentary high flows could cause oil bypass.
4. For maximum efficiency, air inlet temperature should be between 70°F (21°C) and 90°F (32°C).
5. If inlet temperatures up to the maximum of 125°F (52°C) cannot be avoided, install the Type C filter with a Type D element downstream. This will catch the oil vapors that are usually responsible for oil downstream at higher temperatures. Check that compressor is not drawing air at the intake contaminated with harmful chemicals or hydrocarbons.
6. If the foam sock is torn or ruptured, oil may pass downstream from the element. If this should occur, replace the element.
7. In compressors which have been running for a long time without changing of oil, most oils will gradually change their chemical compositions and may develop impurities which attack the plastic bowl, filter seals, or outer foam sock. Periodic replacement of the compressor oil will prevent this occurrence and extend compressor life.

FRENCH CANADIAN

VOUS avez choisi un produit de qualité et nous l'apprécions. Pour être assuré d'obtenir des performances et un fonctionnement parfait, lisez ces instructions avant l'installation de notre matériel.

ATTENTION: SI VOTRE APPAREIL A UN BOL PLASTIQUE

1. **NE PAS** utiliser les unités à bol en plastique sur lesquelles il n'y pas de dispositif de protection installé.* Toutes les unités à bol en plastique sont vendues équipées d'un dispositif de protection afin de minimiser le danger que présente la projection de fragments résultant de l'éclatement du bol. La mise en service de cette unité sans dispositif de protection installé annule les garanties accordées par le fabricant. Le fabricant décline alors toute responsabilité pour toute perte qui en résulterait. **(*SAUF MODÈLE M00)**
2. **NE PAS** installer l'appareil dans un endroit où la température est supérieure à 52°C.
3. **NE PAS** utiliser l'appareil à des pressions supérieures à 10,3 bar.
4. **ATTENTION:** certains huiles de compresseur, produits d'entretien, produits chimiques. solvants, peintures et vapeurs, attaquent les bols plastiques et sont cause de détérioration. Voir la liste sur cette feuille. à ne pas utiliser à proximité de ces produits.
5. **QUAND LE BOL** devient sale le remplacer ou le nettoyer avec un chiffon propre et sec.
6. **NE PAS** installer l'appareil sur une ligne d'air comprimé où le compresseur est lubrifié avec un produit qui attaque les bols plastiques, ou si l'air en contient.
7. **INSPECTER** pour détecter fêlures, craquelures ou autres détériorations. Remplacer immédiatement tout bol fêlé, craquelé, endommagé ou détérioré par un bol métal ou un nouveau bol plastique avec bol de protection métallique.
8. **SI UNE UNITÉ MISE EN SERVICE NE POSSÈDE PAS DE DISPOSITIF DE PROTECTION, COMMANDEZ-EN UN ET INSTALLEZ-LE AVANT DE CONTINUER À VOUS SERVIR DE L'UNITÉ.**

INSTRUCTIONS IMPORTANTES POUR L'INSTALLATION DES FILTRES SUBMICRONIQUES.

1. **NE PAS** installer l'appareil sans avoir préalablement lu la présente notice d'installation. Si l'appareil a un bol en plastique, tenir compte des avertissements spéciaux ci-haut.
2. **SAUF** spécifications contraires du constructeur, cet appareil est prévu pour l'air comprimé, un emploi avec

83-536-000 REV 1 08/02
Printed in U.S.A

1. **NO** instale la unidad hasta que haya leído completamente esta hoja de información sobre el producto. Si su unidad tiene una taza de plástico, observe la información de precauciones especiales indicada anteriormente.
2. **SALVO** que el fabricante especifique lo contrario, este producto está diseñado específicamente para el uso con aire comprimido, y su uso con cualquier otro fluido (líquido o gas) es una aplicación indebida. Por ejemplo, el uso con o la inyección de ciertos líquidos o gases peligrosos en el sistema (tales como el alcohol o el gas de petróleo líquido) podría ser nocivo para la unidad o resultar en una condición de combustión o una fuga externa peligrosa. Antes de utilizar con fluidos que no sean aire, para aplicaciones no industriales, o para sistemas de soporte de vida, consulte al fabricante para obtener una aprobación por escrito. Las garantías del fabricante no tendrán validez en el caso de aplicación indebida y éste no asume ninguna responsabilidad por cualquier pérdida resultante. Los valores máximos de presión y temperatura de las tazas de plástico son 150 lbs/pulgada2 (10,3 barias) y 125°F (52°F); y de las tazas de metal 200 lbs/pulgada2 (14 barias) y 150°F (65,5°C). [(Serie 08/18/28-250 lbs/pulgada2 (17 barias) y 150°F (65,5°C)]
3. **INSTALE** el producto lo más cerca posible del punto donde se está utilizando el aire.
4. **REDUCIR EL TAMAÑO DEL CAÑO** para acomodar un caño de entrada/salida de tamaño más pequeño de un filtro MICROalescer® no afecta el buen funcionamiento del filtro. **NO** seleccione los filtros MICROalescer® por los tamaños de orificio de entrada y salida. Los filtros MICROalescer® se deben seleccionar por el flujo de aire y la presión de entrada requeridos.
5. **INSTALE** un prefiltro de 5 micrones delante del filtro MICROalescer® para prolongar la vida útil del elemento.
6. **INSTALE** un manómetro diferencial (disponible del fabricante) para determinar cuándo cambiar los elementos desechables o instale un manómetro en la entrada y otro en la salida del filtro MICROalescer®. Cuando la diferencia de presiones llegue a 10 lbs/pulgada2 (0,7 barias), cambie el elemento.
7. **PURGUE** todos los vestigios de aceite dentro de los conductos antes de la instalación del filtro.
8. **NO INSTALE** el filtro MICROalescer® en una línea de aire si hubiera algún producto químico en el aire comprimido que dañe la cubierta de plástico celular de poliuretano del elemento.
9. **CUANDO INSTALE** el elemento de filtro, **NO** toque la cubierta de plástico celular. Siempre tómelo por las placas terminales. **NO** toque el elemento MICROnaught® una vez que se le haya puesto en uso. La presión sobre la cubierta de plástico celular exterior puede dañarlo una vez que esté en uso.
10. **CUANDO INSTALE** un secador químico, móntelo después del filtro MICROalescer®.
11. **CUANDO INSTALE** un secador de aire refrigerado, puede instalárselo antes de un filtro MICROalescer®. (Vea el esquema correspondiente en otra parte de estas instrucciones.)
12. **CUANDO INSTALE** un filtro de Tipo C con un elemento AC Pak (carbón activado para adsorción de vapor de aceite), monte el filtro después del secador de aire.
13. **NO INSTALE** una válvula de apertura rápida si ésto causara un flujo excesivo que sobrepase la capacidad de flujo de la unidad.

CUANDO SE DEBE CAMBIAR EL ELEMENTO DE TIPO C

1. **CAMBIE EL ELEMENTO** cuando la diferencia de presiones llegue a 10 lbs/pulgada2 (0,7 barias). Las unidades con indicador de diferencia de presiones se moverán al rojo a 0.7 barias.
2. **NO** cambie el elemento si aparecen manchas de aceite en la parte inferior equivalente a 1/5 del elemento. Esto es normal; las manchas de aceite o agua en la cubierta de plástico celular exterior no indican una necesidad de cambiar el elemento.
3. **CUANDO INSTALE** el elemento utilizando la tuerca inferior de sujeción, apriete la tuerca entre 5 y 6 libras/pie.
4. **NO** utilice aceites o grasa en el elemento o las juntas de la taza. NOTA: Sólo una caída excesiva de presión requiere el cambio del elemento. La caída excesiva de presión indica que el filtro ha filtrado contaminantes sólidos, así como partículas de aceite y agua.

LOCALIZACION DE FALLAS EN LAS INSTALACIONES DEL FILTRO

MICROALESCER® SI LOS AEROSOLES DE ACEITE APARECIERAN EN EL CIRCUITO DESPUES DEL FILTRO MICROALESCER®

1. Esto podría indicar que los conductos no fueron debidamente purgados de contaminantes anteriores.
2. Verifique que la junta obturadora/anillo tórico (según el modelo) esté en su lugar y que haya un sellado adecuado entre la parte superior del elemento y la tapa moldeada. Asegúrese de que el elemento esté sujetado firmemente en su lugar.
3. Controle que el flujo de aire a través de la unidad no sea superior a su capacidad. Los flujos elevados momentáneos podrían ser la causa de un paso de aceite.
4. Para una mayor eficiencia, la temperatura de entrada del aire debe ser entre 70°F (21°C) y 90°F (32°C).
5. Si no pueden evitarse las temperaturas de entrada de hasta el máximo de 125°F (52°C), instale el filtro de Tipo C con un elemento de Tipo D. Esto captará los vapores de aceite que normalmente son responsables del aceite que aparece a temperaturas más altas. Verifique que el compresor no esté aspirando en la entrada, aire contaminado con productos químicos nocivos.
6. Si la funda de espuma está rasgada o rota, el aceite podría filtrarse desde el elemento. Si ocurriera esto, cambie el elemento.
7. En compresores que han estado funcionando durante largo tiempo sin cambiarle el aceite, la mayoría de los aceites cambiarán gradualmente sus composiciones químicas y pueden acumular impurezas que dañan a la taza de plástico, las juntas de los filtros o la funda exterior de espuma. El cambio periódico del aceite del compresor evitará que esto suceda y prolongará la vida útil del compresor.

SOME OF THE MATERIALS THAT WILL ATTACK POLYCARBONATE PLASTIC BOWLS.

Acetaldehyde
Acetic acid (conc.)
Acetone
Acrylonitrile
Ammonia
Ammonium flouride
Ammonium hydroxide
Ammonium sulfide
Anaerobic adhesives and sealants
Antifreeze
Benzene
Benzoic acid
Benzyl alcohol
Brake fluids
Bromobenzine
Butyric acid
Carbolic acid
Carbon disulfide
Carbon tetrachloride
Caustic potash solution
Caustic soda solution
Chlorobenzine
Chloroform
Cresol
Cyclohexanol
Cyclohexanone
Cyclohexene
Dimethyl formamide
Dioxane
Ethane tetrachloride
Ethyl acetate
Ethyl ether
Ethylamine
Ethylene chlorohydrin
Ethylene dichloride
Ethylene glycol
Formaic acid (conc.)
Freon (refrig.and propell)
Gasoline (high aromatic)
Hydrazine
Hydrochloric acid (conc.)
Methylene chloride
Methylene salicylate
Milk of lime (CaOH)
Nitric acid(conc.)
Nitrobenzine
Nitrocellulose laquer
Perchlorethylene
Phenol
Phosphorous hydroxy chloride
Phosphorous trichloride
Propionic acid
Pyridine
Sodium hydroxide
Sodium sulfide
Styrene
Sulfuric acid (conc.)
Sulphural chloride
Thiophene
Toluene
Turpentine
Sulfuric acid (conc.)
Sulphural chloride
Tetrahydronaphtalene
Thiophene
Toluene
Turpentine
Xylene and others

TRADE NAMES OF SOME COMPRESSOR OILS, RUBBER COMPOUNDS AND OTHER MATERIALS THAT WILL ATTACK POLYCARBONATE PLASTIC BOWLS

Atlas "Perma-Guard"
Buna N *
Cellulube #510 and #250
Crylex #5 cement
*Eastman 910
Garlock #98403 (polyurethane)
Haskel #568-023
Hilgard Co's hil phene
Houghton and Co. oil #1120, #1130 & #1055
Houtosafe 1000
Kano Kroil
Keystone penetrating oil #2
Marvel Mystery Oil
Minn. Rubber 366Y
National Compound #N11
"Nylock" VC 3
Parco #1306 Neoprene
Petron PD287
Prestone
Pydraul AC
Sears Regular Motor Oil
Sinclair oil "Lily White"
Some Loctite Compounds
Stillman #269-75 (polyurethane)
Stillman #SR-513 (neoprene)
Stauffer Chemical FYRQUEL #150
Tannergas
Telar
Tenneco anderol #495 and #500 oils
Titon
Zerex

WE CANNOT POSSIBLY LIST ALL HARMFUL SUBSTANCES, CHECK WITH A MOBAY CHEMICAL OR GENERAL ELECTRIC OFFICE FOR FURTHER INFORMATION ON POLYCARBONATE PLASTIC

LISTA DE MATERIALES QUE DAÑAN LAS TAZAS DE PLASTICO DE POLICARBONATO

ɔetaldehido	Acido sulfúrico (conc.)	Ciclohexanona	Estireno	Hidróxido sódico	Sulfuro sódico
ɔetato etílico	Acrilonitrilo	Clorobenceno	Eter etílico	Laca nitrocelulosa	Tetracloruro de carbono
ɔetona	Adhesivos y compuestos	Cloroformo	Etilamina	Lechada de cal (CaOH)	Tetracloruro de etano
ɔido acético (conc.)	obturadores anaeróbicos	Clorohidrina de etileno	Fenol	Liquidos para frenos	Tetrahidronaftaleno
ɔido benzoico	Alcohol bencílico	Cloruro de azufre	Fluoruro amónico	Nitrobenceno	Tiofeno
ɔido butírico	Amoniaco	Cloruro de metileno	Freón (refrig. y propelente)	Percloretileno	Tolueno
ɔido carbólico	Anticongelante	Creosol	Gasolina (altamente aromática)	Piridina	Trementina
ɔido clorhídrico (conc.)	Benceno	Dicloruro de etileno	Glicol etilénico	Salicilato de metileno	Tricloruro de fósforo
ɔido formaico (conc.)	Bromobenceno	Dimetil formamida	Hidrazina	Solución de potasa cáustica	Xileno y otros
ɔido nítrico (conc.)	Ciclohexano	Dioxano	Hidroxicloruro de fósforo	Solución de soda cáustica	
ɔido propiónico	Ciclohexanol	Disulfuro de carbono	Hidróxido amónico	Sulfuro amónico	

ıOMBRES COMERCIALES DE ALGUNOS LUBRICANTES PARA COMPRESORES, COMPUESTOS DE CAUCHO Y OTROS MATERIALES QUE DAÑAN LAS TAZAS DE PLASTICO DE POLICARBONATO

ıte #1120, #1130 y #1055	Aceites Tenneco anderol #495	Caucho Minn 366 y	Hilgard Co's hil phene	Petron PD287	Stillman #269-75 (poliuretano)
ı Houghton y Co.	y #500	Cellulube #510 y #250	Houtosafe 1000	Prestone	Stillman #SR-513 (neopreno)
ıte Marvel Mystery	Algunos compuestos Loctite	Cemento Crylex #5	Kano Kroil	Pydraul AC	Tannergas
ıte penetrante Keystone #2	Atlas "Perma-Guard"	Eastman 910	National Compound #N11	Aceite de motor regular Sears	Telar
ıte Sinclair "Lily White"	Buna N	Garlock #98403 (poliuretano)	Neopreno Parco #1306	Stauffer Chemical	Titon
		Haskel #568-023	Nylock* VC-3	FYROQUEL #150	Zerex

OBVIAMENTE, NO PODEMOS LISTAR TODAS LAS SUSTANCIAS NOCIVAS; CONSULTE A UNA OFICINA DE MOBAY CHEMICAL O DE GENERAL ELECTRIC PARA OBTENER MAS INFORMACION SOBRE EL PLASTICO DE POLICARBONATO

Typical Installation • Exemple d'installation • Typische Installation • Installazione tipica • Instalación normal

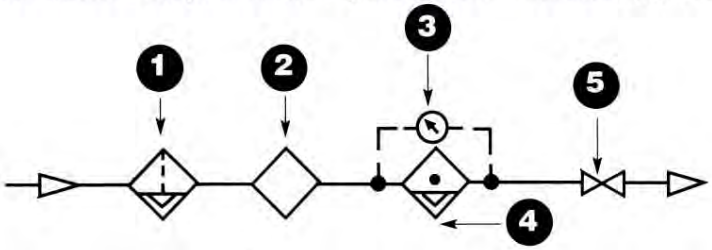

1 PREFILTER
PRÉFILTRE
VORFILTER
PREFILTRO
PREFILTRO

2 REFRIGERATED AIR DRYER
SÉCHEUR PAR RÉFRIGÉRATION
KÜHL TROCKNER
ESSICCATORE A REFRIGERAZIONE
SECADOR DE AIRE REFRIGERADO

3 DIFFERENTIAL PRESSURE GAUGE
MANOMÈTRE DIFFÉRENTIEL
DIFFERENTIALDRUCK-MANOMETER
MANOMETRO DIFFERENZIALE
MANOMETRO DIFERENCIAL

4 MICROALESCER® FILTER WITH MICRONAUGHT® ELEMENT
FILTRE SUBMICRONIQUE AVEC CARTOUCHE MICRONAUGHT®
MICROALESCER®-FILTER MIT MICRONAUGHT®-ELEMENT
FILTRO MICROALESCER® CON ELEMENTO MICRONAUGHT®
FILTRO MICROALESCER® CON ELEMENTO MICRONAUGHT®

5 VALVE
SOUPAPE
VENTIL
VALVOLA
VALVULA

MICROalescer® Filter Combination • Combinaison Filtre MICROalescer® • MICROalescer®-Filter-Kombination Combinazione Filtro MICROalescer® • Combinación de Filtros MICROalescer®

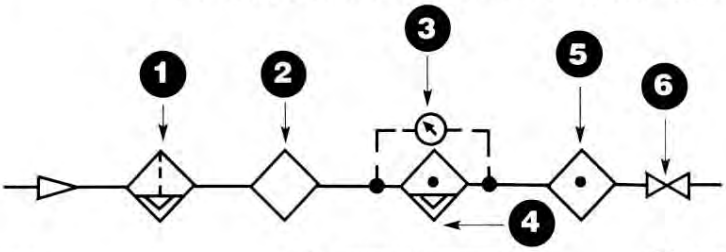

1 PREFILTER
PRÉFILTRE
VORFILTER
PREFILTRO
PREFILTRO

2 REFRIGERATED AIR DRYER
SÉCHEUR PAR RÉFRIGÉRATION
KÜHL TROCKNER
ESSICCATORE A REFRIGERAZIONE
SECADOR DE AIRE REFRIGERADO

3 DIFFERENTIAL PRESSURE GAUGE
MANOMÈTRE DIFFÉRENTIEL
DIFFERENTIALDRUCK-MANOMETER
MANOMETRO DIFFERENZIALE
MANOMETRO DIFERENCIAL

4 ELEMENT MICRO NAUGHT®
ÉLÉMENT MICRONAUGHT®
ELEMENTO MICRONAUGHT®
ELEMENTO MICRONAUGT®

5 ELEMENT ODERNAUGHT®
ÉLÉMENT ODERNAUGHT®
ELEMENTO ODERNAUGHT®
ELEMENTO ODERNAUGT®

4 VALVE
SOUPAPE
VENTIL
VALVOLA
VALVULA

WILKERSON®

83-212-000 REV 1 04/02

INSTALLATION AND MAINTENANCE SHEET

Coalescing Filter Model M32 With Variations and Accessories

INSTALLATION

1. Purge downstream air line of oil.
2. Install as close as possible to where regulated air is being used.
3. Install the unit with the air flowing in the direction indicated by the arrow on the body.
4. A drain line with 1/8" NPT connection (with red automatic drain) or 1/8" BSPT connection (with green automatic drain) or 1/4" NPT connection (without automatic drain) may be attached to drain port if desired. Drain line should be 1/4" tubing or larger, as short as possible, and crimp free.
5. Maximum inlet pressure and operating temperature ratings are: transparent plastic bowls, 150 psig (10,3 bar) and 125°F (52°C); metal bowls, 150 psig (10,3 bar) and 150°F (66°C).

TYPICAL INSTALLATION (not to scale)

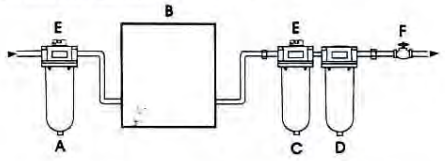

A. PREFILTER - It is recommended that a "B" Element coalescing (0.5 ppm) prefilter be installed upstream from the coalescer filter to prolong element life.
B. AIR DRYER - (Refrigerated or Desiccant). An air dryer is generally preferred for optimal results, but is optional.
C. HIGH EFFICIENCY COALESCER FILTER - It is recommended that a "C" element coalescer (.01 ppm) filter be installed to protect the compressed air system from oil and particulate contamination.
D. OIL VAPOR FILTER - The Type D element filter (0.003 PPM) is an adsorption type for removing oil vapors, oil-associated odors, whether petroleum base or synthetic base and nearly 100% of any remaining solid contaminants.
E. DIFFERENTIAL PRESSURE INDICATOR - Maximum recommended pressure drop across coalescer filters is 7 psi (0,5 bar). This can be monitored by installing a Wilkerson differential pressure indicator.
F. VALVE - Do not use a valve or shutoff device in conjunction with a coalescer filter that will allow a momentary or surge pressure drop greater than 50 psi (3,4 bar). To avoid high surges which can either ruin the element or momentarily allow downstream contamination, use a slow-opening type valve.

MAINTENANCE

1. The element operates effectively when it is saturated. The element's useful life will end only when the differential pressure indicator is completely red. The element cannot be cleaned or reused and must be replaced at the end of its useful life.
2. IF THE UNIT HAS A MANUAL DRAIN, DRAIN THE UNIT ONCE EVERY 8 HOURS. If the unit is equipped with an automatic drain clean the screen around the drain or replace the element by removing the nut and removing the drain assembly. Clean screen by blowing off with air blow gun.
3. When bowl becomes dirty, clean by wiping with a clean, dry cloth.
4. Before placing the unit in service, make sure that the bowl is properly installed, and securely bolted in place.

REPAIR KITS AND REPLACEMENT PARTS

Filter Element Kit Type D Element (carbon adsorption) (includes filter element and o-rings)	**MXP-95-558**
Filter Element Kit Type C Element (.01 ppm/wt) (includes filter element and o-rings)	**MTP-95-559**
Filter Element Kit Type B Element (includes filter element and o-rings)	**MSP-95-873**
Bowl Gasket Kit	**GRP-95-288**
Automatic Mechanical Drain ("Series A", 1/8" NPT; red color)—(includes Fluorocarbon seals, o-ring and nut)	**GRP-95-981**
Automatic Mechanical Drain ("Series A", G 1/8"; green color)—(includes Fluorocarbon seals, o-ring and retainer nut)	**GRP-95-300**
Automatic Mechanical Drain (includes Fluorocarbon seals, o-ring and retainer nut)	**GRP-95-914**
Differential Pressure Indicator (Standard)	**DP2-01-000**
Differential Pressure Gauge (Optional)	**DP3-01-000**

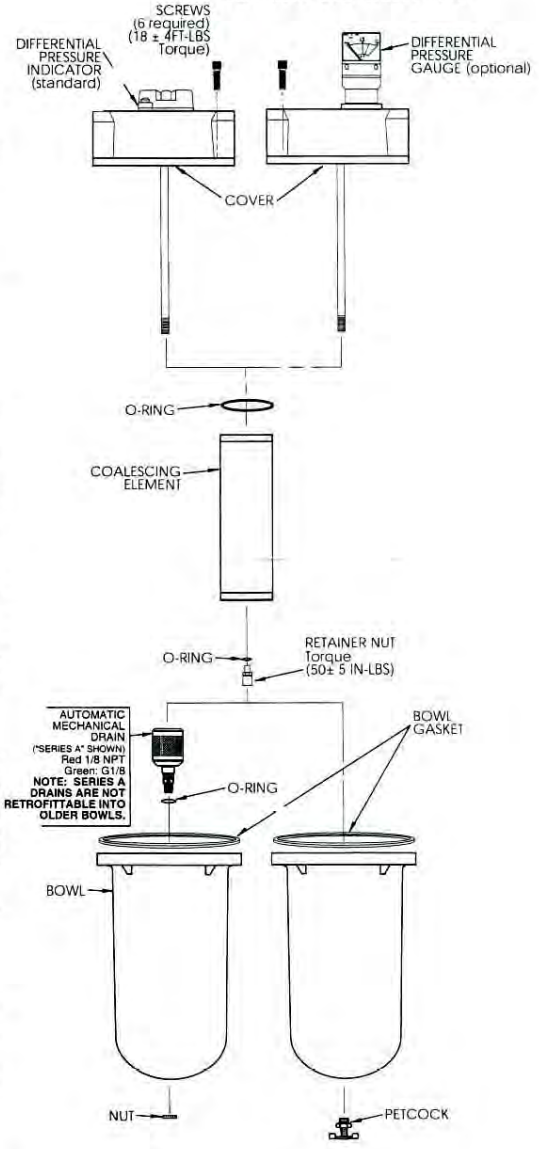

83-212-000 REV 1 04/02
Printed in the U.S.A.

WILKERSON
OPERATIONS

INSTALLATION AND MAINTENANCE SHEET

Filter Models F35, F36 and F37 with Variations and Accessories

⚠ WARNING ⚠

EXCEPT as otherwise specified by the manufacturer, this product is specifically designed for compressed air service, and use with any other fluid (liquid or gas) is a misapplication. For example, use with or injection of certain hazardous liquids or gases in the system (such as alcohol or liquid petroleum gas) could be harmful to the unit or result in a combustible condition or hazardous external leakage. Manufacturer's warranties are void in the event of misapplication, and manufacturer assumes no responsibility for any resulting loss. Before using with fluids other than compressed air, or for nonindustrial applications, or for life support systems consult manufacturer for written approval.

ATTENTION: Make sure bowl is fully inserted into body, and then fully turned to lock bowl in place before applying air pressure to unit. When bowl is properly installed, the alignment markings on the bowl/bowlguard assembly and the marks on the body will line up, indicating proper assembly. Failure to do so may cause air pressure to blow bowl off of unit, resulting in serious personal injury or death.

INSTALLATION

1. Purge downstream air line of oil.
2. Install the unit with the air flowing in the direction indicated by the arrow on the body and/or the DP2 Differential Pressure Indicator.
3. The drain line connection is dependent on the type of drain that is selected.
4. Maximum inlet pressure and operating temperature ratings are: units with DP2 150 psig (10,3 bar) 150°F (66°C); units without DP2: 300 psig (20 bar) 150°F (66°C).

NOTE: CONTAMINATES REMOVED FROM THE COMPRESSED AIR SYSTEM MUST BE DISPOSED OF IN ACCORDANCE WITH LOCAL, STATE AND FEDERAL STANDARDS.

MAINTENANCE

1. TO CLEAN OR REPLACE FILTER ELEMENT: Shut off air supply and reduce pressure in the unit to zero, remove the 8 screws from the filter housing, unscrew the filter support and remove filter element.

a. IF THE UNIT HAS A RIGID FILTER ELEMENT: remove and clean periodically by tapping on a hard surface, and blowing off with air gun. Torque element support to 8 ± 1 ft. lb. when replacing element. Element should be cleaned/replaced when the DP2 differential pressure indicator is completely red.

2. IF THE UNIT HAS A MANUAL DRAIN, DRAIN THE UNIT ONCE EVERY 8 HOURS MINIMUM. To do so, rotate the drain knob to the left one or two turns.* If the unit is equipped with an automatic drain, clean the screen around the drain. Clean screen by blowing off with air gun.
3. When the bowl becomes dirty, clean with a dry clean cloth.
4. **Before placing the unit in service, make sure that the bowl is properly reinstalled, and securely bolted in place.**

***NOTE: In the event the drain knob is over-rotated, it may become disengaged from the drain stem. In such a case, pull down on both the knob and the stem while rotating to the right to re-engage.**

REPAIR KITS AND REPLACEMENT PARTS

Filter Element Kit (F35) (includes filter element and o-rings)	**FRP-95-505**
Filter Element Kit Type (F36) (includes filter element and o-rings)	**FRP-95-506**
Filter Element Kit Type (F37) (includes filter element, o-ring)	**FRP-95-507**
Drain Plate Kits	
Drain Plate (For use with internal Automatic Mechanical float drain No. GRP-95-981 or GRP-96-300)	**GRP-95-391**
Drain Plate (¼ NPT)	**GRP-95-392**
Drain Plate Rc ¼	**GRP-95-394**
Drain Plate (½ NPT)	**GRP-95-393**
Drain Plate Rc ½	**GRP-95-395**
Differential Pressure Indicator (Standard)	**DP2-01-001**
Differential Pressure Removal Cap Kit	**GRP-95-022**
Bowl O-ring Kit	**GRP-95-291**
Drains:	
Internal Drains:	
Automatic Mechanical Drain (Fluorocarbon seals w/⅛ NPT stem)	**GRP-95-981**
Automatic Mechanical Drain (Fluorocarbon seals w/R ⅛ stem)	**GRP-96-300**
Manual Override for Auto Drain (GRP-95-981 ⅛ NPT)	**GRP-96-000**
(GRP-96-300 R ⅛)	**GRP-96-100**
External Drains:	
External Automatic Mechanical Drain	**X01-04-000**
External Automatic Mechanical Drain	**X02-04-F00**
External Automatic Mechanical Drain	**XB3-04-000**

(See reverse side for Repair and Replacement Parts cont.)

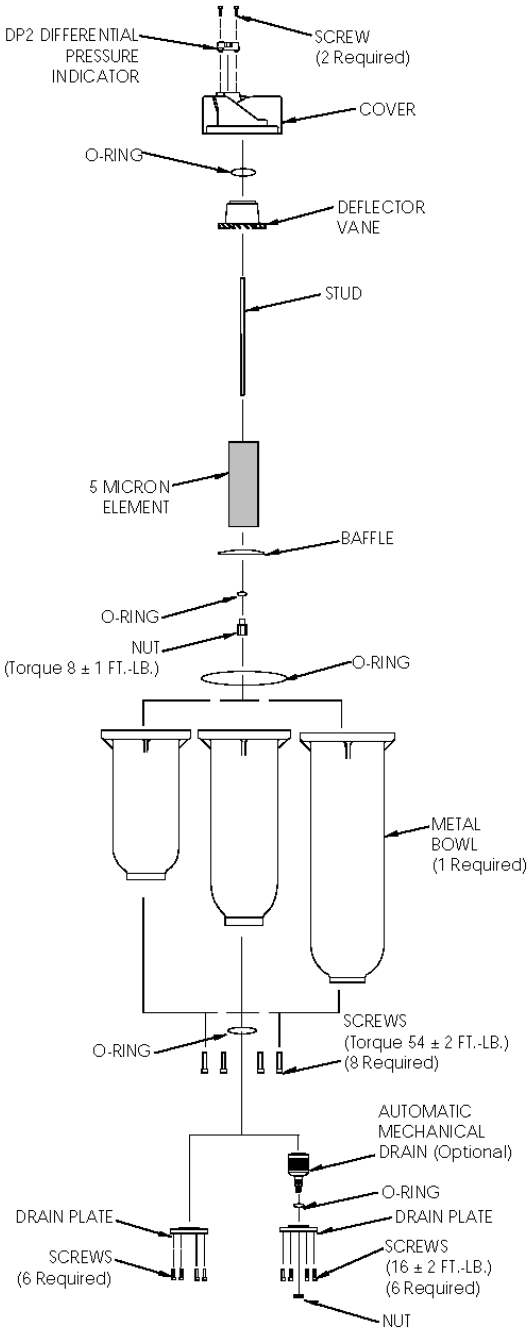

83-719-000 REV B 11/96
Printed in the U.S.A.

REPAIR KITS AND REPLACEMENT PARTS Cont.

Automatic Electric Drain Valve

MODEL NUMBER KIT	PORT SIZE	ORIFICE SIZE	ELECTRICAL	OPERATING PRESS MIN.	MAX.
X20-02-ED00	¼" NPT	7/64"	115 VAC/1Ph/50-60Hz	2 psig	300 psig
X20-02-EE00	¼" NPT	7/64"	230 VAC/1PH/50-60Hz	2 psig	300 psig
X20-02-EC00	¼" NPT	7/64"	24 VDC	5 psig	300 psig
X20-04-ED00	½" NPT	7/64"	115 VAC/1Ph/50-60Hz	2 psig	300 psig
X20-04-EE00	½" NPT	7/64"	230 VAC/1PH/50-60Hz	2 psig	300 psig
X20-04-EC00	½" NPT	7/64"	24 VDC	5 psig	300 psig

WILKERSON
OPERATIONS

INSTALLATION AND MAINTENANCE SHEET

Filter Models M35, M36 and M37 with Variations and Accessories

WARNING

EXCEPT as otherwise specified by manufacturer, this product is specifically designed for compressed air service only, and use with any other fluids (liquid or gas) is a misapplication. For example, use with or injection of certain hazardous liquids or gases in the system (such as alcohol or liquid petroleum gas) could be harmful to the unit or result in a combustible condition or hazardous external leakage. Manufacturer's warranties are void in the event of misapplication, and manufacturer assumes no responsibility for any resulting loss. Before using with fluids other than air, or for non-industrial applications, consult manufacturer for written approval.

INSTALLATION

1. Purge downstream air line of oil.
2. Install the unit with the air flowing in the direction indicated by the arrow on the body and/or the DP2 Differential Pressure Indicator.
3. The drain line connection is dependent on the type of drain that is selected.
4. Maximum inlet pressure and operating temperature ratings: units with DP2, 150 psig (10,3 bar) and 150°F (66°C);units without DP2: 300 psig (20,7 bar) 150°F (66°C).

TYPICAL INSTALLATION (not to scale)

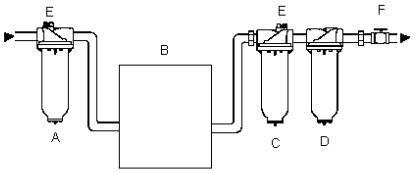

A. PREFILTER - It is recommended that a Wilkerson "B1" Element coalescing prefilter (particle removal down to 1.0 micron; maximum downstream remaining oil content is 0.5 ppm/wt.) is installed to protect the dryer from contaminants and extend the element life in the high efficiency coalescing filter (filter "C").
B. AIR DRYER - (Refrigerated or Desiccant). An air dryer is recommended if water vapor condensation is a problem.
C. HIGH EFFICIENCY COALESCER FILTER - It is recommended that a Wilkerson "C" element coalescer (particle removal down to 0.01 micron; maximum downstream remaining oil content 0.01 ppm/wt) be installed to protect the compressed air system from oil and particulate contamination.
D. OIL VAPOR FILTER - The Type D element filter (maximum downstream remaining oil content 0.003 ppm/wt) is an adsorption type for removing oil vapors, oil-associated odors, whether petroleum base or synthetic base and nearly 100% of any remaining solid contaminants.
E. DIFFERENTIAL PRESSURE INDICATOR/GAUGE - Maximum recommended pressure drop across coalescer filters is 7 psi (0,5 bar). This can be monitored by installing a Wilkerson DP2 differential pressure indicator.
F. VALVE - Do not use a valve or shutoff device in conjunction with a coalescer filter that will allow a momentary or surge pressure drop greater than 50 psid (3,4 bar). To avoid high surges which can either ruin the element or momentarily allow downstream contamination, use a slow-opening type valve.

MAINTENANCE

1. The element operates effectively when it is saturated. The element's useful life will end only when the DP2 differential pressure indicator is completely red. The element cannot be cleaned or reused and must be replaced at the end of its useful life.
2. IF THE UNIT HAS A MANUAL DRAIN, DRAIN THE UNIT ONCE EVERY 8 HOURS MINIMUM. If the unit is equipped with an automatic drain clean the screen around the drain. Clean screen by blowing off with air gun.
3. When bowl becomes dirty, clean with a dry clean cloth.
4. Before placing the unit in service, make sure that the bowl is properly reinstalled, and securely bolted in place per noted torque specification.

(See reverse side for Repair and Replacement Kits)

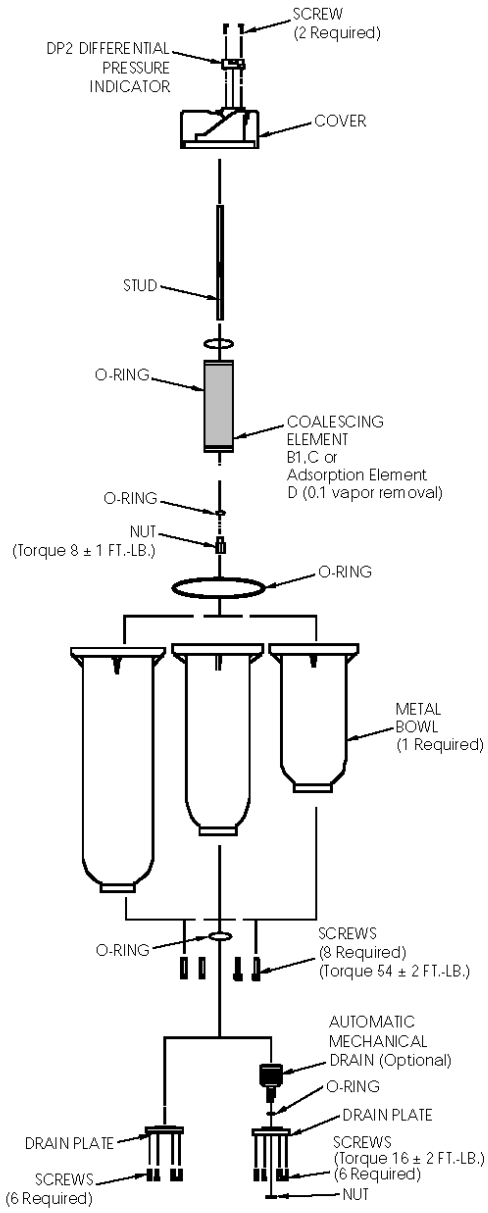

83-718-000 REV B 10/96
Printed in the U.S.A.

REPAIR KITS AND REPLACEMENT PARTS

Filter Element Kit (kit includes filter element, element o-ring and retainer o-ring)

	Element Types		
Model	Type B1 (1 micron)	Type C (0.01 micron)	Type D (oil vapor, adsorption)
M35	**MSP-95-502**	**MTP-95-502**	**MXP-95-502**
M36	**MSP-95-503**	**MTP-95-503**	**MXP-95-503**
M37	**MSP-95-504**	**MTP-95-504**	**MXP-95-504**

Drain Plate Kit
- Drain Plate (Use with internal automatic mechanical float drain no. GRP-95-981 or GRP-96-300)....**GRP-95-391**
- Drain Plate (¼ NPT)....**GRP-95-392**
- Drain Plate (Rc ¼)....**GRP-95-394**
- Drain Plate (½ NPT)....**GRP-95-393**
- Drain Plate (Rc ½)....**GRP-95-395**

Bowl O-ring Kit....**GRP-95-291**
Differential Pressure Indicator (Standard)....**DP2-01-001**
DP2 Removal Cap Kit (for 300 psig appl.)....**GRP-95-022**
Internal Drains:
- Automatic Mechanical Drain (Fluorocarbon seals w/⅛ NPT stem)....**GRP-95-981**
- Automatic Mechanical Drain (Fluorocarbon seals w/R ⅛ stem)....**GRP-96-300**
- Manual Override for Auto Drain (GRP-95-981 ⅛ NPT)....**GRP-96-000**
  (GRP-96-300 R ⅛)....**GRP-96-100**

External Drains
- External Automatic Mechanical Drain....**X01-04-000**
- External Automatic Mechanical Drain....**X02-04-F00**
- External Automatic Mechanical Drain....**XB3-04-000**

Automatic Electric Drain Valve

MODEL NUMBER KIT	PORT SIZE	ORIFICE SIZE	ELECTRICAL	OPERATING PRESS MIN.	MAX.
X20-02-EE00	¼" NPT	7/16"	115 VAC/1Ph/50-60Hz	2 psig	300 psig
X20-02-ED00	¼" NPT	7/16"	230 VAC/1PH/50-60Hz	2 psig	300 psig
X20-02-EC00	¼" NPT	7/16"	24 VDC	5 psig	300 psig
X20-04-EE00	½" NPT	7/16"	115 VAC/1Ph/50-60Hz	2 psig	300 psig
X20-04-ED00	½" NPT	7/16"	230 VAC/1PH/50-60Hz	2 psig	300 psig
X20-04-EC00	½" NPT	7/16"	24 VDC	5 psig	300 psig

Standard Regulator Literature No. 83-538-000 REV 1 08/02

MANUFACTURER'S WARRANTY

Manufacturer's products are warranted to be free from defects in material and workmanship under proper use, installation, application and maintenance in accordance with manufacturer's written recommendations and specifications for one year from the date of shipment from the factory. Manufacturer's obligation under this warranty is limited to and the sole remedy for any such defect shall be the repair or replacement (at manufacturer's option) of unaltered products returned to manufacturer and proven to have such defect provided such defect is promptly reported to manufacturer within one year period.

THIS IS THE ONLY AUTHORIZED MANUFACTURER'S WARRANTY AND IS IN LIEU OF ALL OTHER EXPRESS OR IMPLIED WARRANTIES OR REPRESENTATIONS, INCLUDING ANY IMPLIED WARRANTIES OF MERCHANTABILITY OF FITNESS, OR OF ANY OTHER OBLIGATIONS ON THE PART OF MANUFACTURER. Warranty claims must be submitted and shall be processed in accordance with manufacturer's established warranty claim procedure. In no event will manufacturer be liable for business interruptions, loss of profits, personal injury, costs of delay or for any other special indirect incidental or consequential losses, costs or damages.

WARNING: USE LIMITATIONS

Manufacturer's warranties are void, and manufacturer assumes no responsibility for any resulting cost loss, injury or any other damages whatsoever with respect to any plastic bowl unit for which a metal bowl guard is standard equipment if the unit is placed in service without the metal bowl guard and except as otherwise specified in writing by manufacturer with respect to any manufacturer's products which are used in other than compressed air service. Specific warnings with respect to these and other use limitations appear elsewhere in this product instruction sheet.

YOU *have selected a quality product, and we appreciate it. To be assured of maximum performance and satisfaction, please read these instructions before installing this product.*

VOUS *Avez choisi un produit de qualité et nous l'apprécions. Pour être assuré d'obtenir des performances et un fonctionnement parfait, lisezces instructions avant l'installation de notre matériel.*

SIE *Haben ein Qualitätsprodukt ausgewählt und wir danken Ihnen für das uns erwiesene Vertrauen. Damit das Gerät mit optimaler Leistung und Sicherheit arbeitet, bitten wir Sie, vor dem Einbau die nachfolgenden Instruktionen zu lesen.*

VOI *avete scelto un prodotto di qualità e noi lo apprezziamo. Per ottenere le mazzime prestazioni e la massima soddisfazione da questi prodotti, Vi consigliamo di leggere queste istruzioni prima dell'installazione.*

USTED *ha seleccionado un producto de calidad y lo apreciamos. Para asegurar un máximo rendimiento y satisfacción, sírvase leer estas instrucciones antes de instalar este producto.*

ENGLISH

IMPORTANT INSTALLATION INSTRUCTIONS FOR REGULATORS

1. **DO NOT** install the unit until you have read this entire product information sheet.
2. **EXCEPT** as otherwise specified by manufacturer, this product is specifically designed for compressed air service, and use with any other fluid (liquid or gas) is a misapplication. For example, use with or injection of certain hazardous liquids or gases in the system (such as alcohol or liquid petroleum gas) could be harmful to the unit or result in a combustible condition or hazardous external leakage. Manufacturer's warranties are void in the event of misapplication and manufacturer assumes no responsibility for any resulting loss. Maximum pressure and temperature ratings are 300 psig (21 bar) 150°F (65.5°C).
3. **INSTALL** a filter before the regulator for maximum trouble-free operation.
4. **INSTALL** regulator after the filter when mounting in a combination.
5. **INSTALL** regulator in any convenient position.
6. **MOUNT** gauge in either gauge port.
7. **GAUGE PORTS** may be used as additional regulated air pressure outlet ports.
8. **TO ADJUST** air pressure turn adjustment knob/handle clockwise to raise the regulatedpressure, and counterclockwise to lower the regulated pressure.

IMPORTANT MAINTENANCE INSTRUCTIONS FOR REGULATORS

1. **TURN** air pressure off and vent air from system.
2. **REMOVE** the bottom plug and clean valve and seat. It is not necessary to remove regulator from the air line to remove plug.

FRENCH CANADIAN

INSTRUCTIONS IMPORTANTES POUR L'INSTALLATION DES REGULATEURS DE PRESSION

1. **NE PAS** installer l'appareil avant d'avoir lu en entier cette notice d'information sur let produit.
2. **SAUF** spécifications contraires du constructeur, cet appareil est prévu pour l'air comprimé, un emploi avec d'autres fluides (liquides ou gaz) est contre-indiqué. Par exemple, l'utilisation avec certains liquides ou gaz dangereux, ou leur injection, (tels que alcool, gaz de pétrole liquéfié) peut être dangereuz pour l'appareil ou peut entrainer des risques d'explosion ou des fuites dangereuses. Les garanties du constructeur sont nulles dans le cas d'une mauvaise utilisation et le constructeur dégage sa responsabilité dans le cas d'accident. La pression et la température maximales sont de (21 bar) et (65.5°C).
3. **INSTALLER** un filtre avant le régulateur pour une utilisation maximale sans problèmes.
4. **INSTALLER** le régulateur après le filtre quand il est monté dans une combinaison
5. **INSTALLER** le régulateur dans n'importe quelle position.
6. **MONTER** le manomètre sur l'un ou l'autre des orifices de raccordement du manomètre.
7. **LES ORIFICES** de raccordement du manomètre peuvent être utilisés comme des sorties additionnelles d'air régulé.
8. **POUR REGLER** la pression tourner le boulon de réglage dans le sens des aiguilles d'une montre pour augmenter la pressio régulée, et dans le sens inverse des aiguilles d'une montre pour diminuer la pression régulée.

INSTRUCTIONS IMPORTANTES POUR LA MAINTENANCE DES REGULATEURS DE PRESSION

1. **COUPER** l'air comprimé et purger l'installation.
2. **OTER** le bouchon inférieur et nettoyer la valve et le siége. Il n'est pas nécessaire d'ôter le régulateur de la ligne d'air pour enlever le bouchon.

GERMAN

WICHTIGE INSTALLATIONSANLEITUNG FÜR REGLER

1. **LESEN SIE** diese informationsbroschüre genau durch, bevor Sie das Gerät installieren.
2. **FALLS** vom Hersteller nicht ausdrücklich anders angegeben, wurde dieses Erzeugnis ausschließlich für den Betrieb mit Druckluft konstruiert. Die Verwendung eines anderen Mediums ist daher falsch. So kann zum Beispiel die Verwendung bzw. Einspritzung von bestimmten gefährlichen Flüssigkeiten oder Gasen in der Anlage (wie etwa Alkohol oder Petroleum) das Gerät beschädigen bzw. Explosionsgefahr oder ein gefährliches Außenleck verursachen. Im Falle einer solchen Fehlanwendung erlischt die Herstellergarantie und der Erzeuger übernimmt keine Verantwortung für einen etwa sich daraus ergebenden Verlust. Der zulässige Höchstdruck beträgt 21 bar, die zulässige Höchsttempeatur 65.5°C.
3. **INSTALLIEREN SIE** zur Gewährleistung eines störungsfreien Betriesbes einen Filter vor dem Regler.
4. **MONTIEREN SIE** bei einer Kombination den Regler nach dem Filter.
5. **INSTALLIEREN SIE** den Regler in einer bequemen Position.
6. **MONTIEREN SIE** ein Manometer in einer beliebigen Manometer-Öffnung.
7. **DIE MANOMETER-ÖFFNUNGEN** können als zusätzliche geregelte Druckluft-Auslaßöffnungen verwendet werden.
8. **DRUCKREGELUNG:** Knopf/Hebel im Uhrzeigersinn: höherer Druck; Knopf/Hebel gegen Uhrzeigersinn: niedrigerer Druck.

WICHTIGE WARTUNGSANLEITUNG FÜR REGLER

1. **DRUCK** abstellen und System entlüften.
2. **ENTFERNEN,** Ventil und Sitz reinigen. Um schraubstopfen entfernen zu können, braucht Regler nicht aus der Drucklufleitung ausgebant werden.

ITALIAN

IMPORTANTI INFORMAZIONI PER L'INSTALLAZIONE DE REGOLATORI

1. **NON INSTALLARE** l'unità prima di avere interamente letto tutte le informazioni contenute in questo fogilo.
2. **SE** non altrimenti precisato dal costruttore, questo prodotto è specificatamente costruito per essere usaro con aria compressa, e l'uso con ogni altro tipo di fluido (liquido o gas) è errato. Per esempio l'uso o l'iniezione nel sistema di certi liquidi o gas pericolosi (come alcool o gas liquido di petrolio) può essere dannoso all'apparecchio o portare a condizioni di combustione causando fughe pericolose. Nel caso di errate applicazioni, le garanzie di costruzione decadono ed il costruttore declina ogni responsabilità per qualsiasi tipo di danno. Ivalori massimi di pressione e temperatura sono 21 bar e 65.5°C.
3. **INSTALLARE** un filtro prima del regolatore per operazioni con la massima sicurezza.
4. **INSTALLARE** il regolatore dopo il filtro quando si tratta di una combinazione.
5. **INSTALLARE** il regolatore in ogni posizione conveniente.
6. **MONTARE** il manometro in uno degli appositi fori.
7. **I FORI LIBERI** possono essere usati come fori addizionali per uscita d'aria regolata.
8. **PER REGOLARE** la pressione: ruotare la manopola di regolazione in senso orario per aumentare la pressioneed in senso antiorario per ridurla.

IMPORTANTI INFORMAZIONI PER LA MANUTENZIONE DEI REGOLATORI

1. **CHIUDERE** la pressione e scaricare aria dal sistema.
2. **TOGLIERE** il tappo e pulire la valvola e la sede. Non è necessario staccare il regolatore dalla linea per togliere il tappo.

83-538-000 REV 1 08/02
Printed in the U.S.A.

WILKERSON®

83-528-000 REV 1 08/02

Dial-Air™ Regulators

MANUFACTURER'S WARRANTY

Manufacturer's products are warranted to be free from defects in material and workmanship under proper use, installation, application and maintenance in accordance with manufacturer's written recommendations and specifications for one year from the date of shipment from the factory. Manufacturer's obligation under this warranty is limited to and the sole remedy for any such defect shall be the repair or replacement (at manufacturer's option) of unaltered products returned to manufacturer and proven to have such defect, provided such defect is promptly reported to manufacturer within said one year period.

THIS IS THE ONLY AUTHORIZED MANUFACTURER'S WARRANTY AND IS IN LIEU OF ALL OTHER EXPRESS OR IMPLIED WARRANTIES OR REPRESENTATIONS, INCLUDING ANY IMPLIED WARRANTIES OF MERCHANTABILITY OR FITNESS, OR OF ANY OTHER OBLIGATIONS ON THE PART OF MANUFACTURER. Warranty claims must be submitted and shall be processed in accordance with manufacturer's established warranty claim procedure. In no event will manufacturer be liable for business interruptions, loss of profits, personal injury, costs of delay or for any other special indirect, incidental or consequential losses, costs or damages.

⚠ WARNING ⚠

USE LIMITATIONS

Manufacturer's warranties are void and manufacturer assumes no responsibility for any resulting cost, loss injury or any other damages whatsoever with respect to any plastic bowl unit for which a bowl guard is standard equipment if the unit is placed in service without the bowl guard and except as otherwise specified in writing by manufacturer with respect to any manufacturer's products which are used in other than compressed air service. Specific warnings with respect to these and other use limitations appear elsewhere in this product instruction sheet.

YOU have selected a quality product, and we appreciate it... To be assured of maximum performance and satisfaction please read these instructions before installing this product.

IMPORTANT INSTALLATION INSTRUCTIONS *FOR DIAL-AIR™ REGULATORS*

1. **DO NOT** install the unit until you have read this entire product information sheet.
2. **EXCEPT** as otherwise specified by manufacturer, this product is specifically designed for compressed air service, and use with any other fluid (liquid or gas) is a misapplication. For example, use with or injection of certain hazardous liquids or gases in the system (such as alcohol or liquid petroleum gas) could be harmful to unit or result in a combustible condition or hazardous external leakage. Manufacturer's warranties are void in the event of misapplication and manufacturer assumes no responsibility for any resulting loss. Maximum pressure and temperature ratings are 300 psig (21 bar) and 150°F (65.5°C).
3. **INSTALL** upstream of and as close as possible to where regulated air is needed.
4. **INSTALL** with air flow in direction of arrow on casting.
5. **DO NOT** restrict the air flow with undersize piping or fittings, unless maximum air flow is not needed.
6. **INSTALL** regulator in any rotational position.
7. **GAUGE PORTS** may be used for installing gauge or they may be used as additional regulated air outlet ports. Plug all unused ports.
8. **PANEL MOUNTING** requires a 2 11/16" (69 mm) diameter hole, and 4 7/32" (5.5 mm) screw holes. Unit can be mounted on material up to 1 1/4" (32 mm) thick.
9. **INSTALLATION** of a 5-micron rated filter upstream of regulator is recommended.
10. **TO REGULATE AIR** turn adjustment knob clockwise to raise the regulated air pressure and counterclockwise to lower the regulated air pressure.

IMPORTANT MAINTENANCE INSTRUCTIONS FOR DIAL-AIR™ REGULATORS

1. **BEFORE SERVICING THIS UNIT, READ THIS ENTIRE PRODUCT INFORMATION SHEET AND TURN OFF AIR SUPPLY AND VENT BOTH SIDES OF REGULATOR.**

LUBRICATION OF DIAL-AIR™ REGULATORS

1. **FOR TROUBLE-FREE OPERATION**, proper lubrication of the Dial-Air™ regulator is essential.
2. **WHEN ANY** of the following symptoms occur, lubricate regulator with Magnalube-G®. (See note) If Magnalube-G® is not available, use a heavy grease such as Parker O-ring Lube, Lubriplate, or Molykote, however, these lubricants "wash out" much sooner than Magnalube-G®. **NOTE:** Never use oil as a lubricant.
   A. Excessive relief venting.
   B. Inability to attain high secondary pressure.
   C. Erratic secondary pressures.
   D. Excessive hysteresis (a retardation of desired effect: in this case because of the lack of lubrication).
3. Refer to "Figure A" for steps 1 thru 10.
   1. Remove bottom plug (1), main valve spring (2), main valve (3), pilot valve spring (4), and pilot valve (5).
   2. Clean main valve molded rubber seat (Do not lubricate).
   3. Clean and lubricate bottom plug seal, main valve seal and pilot valve seal.
   4. Reassemble unit.
   5. If problem is not remedied, lubricate remaining seals. (See steps 6 thru 10)
   6. Remove retaining ring (6) and pull bonnet assembly (7) from unit.
   7. Remove upper piston (8), upper piston cup (9), lower piston (10), needle valve (11), and needle valve spring (12).
   8. Clean and lightly lubricate inside of body.
   9. Clean and lubricate upper piston seal, upper piston cup seal, lower piston seal, needle valve seal and main valve slide seal (13).
   10. Reassemble unit. If symptoms still exist, contact manufacturer.

RECALIBRATION OF DIAL-AIR™ REGULATORS

1. **DO NOT ATTEMPT TO CALIBRATE UNIT UNTIL ALL EIGHT SEALS HAVE BEEN PROPERLY LUBRICATED.**
2. **TO RECALIBRATE Dial-Air™ REGULATOR:**
   A. **INSTALL** regulator on air line with at least 110 psig (7,5 bar) air pressure at the inlet port.
   B. **INSTALL** an air pressure gauge to one of the gauge ports. Plug remaining gauge port with plug (supplied).
   C. **REMOVE** lock button (Figure A, Item 14) from unit.
   D. **TURN** adjusting knob to 100 psi (7 bar) setting.
   E. **CHECK** the gauge for 100 psig (7 bar) reading. If gauge reads other than 100 psig (7 bar) adjust screw "A" (Fig. B) with a screwdriver while holding adjusting knob on 100 psi (7 bar) setting. If more than one-half turn of screw "A" is required to achieve 100 psig (7 bar), see "G" below.
   F. **TO CHECK CALIBRATION ADJUSTMENT:** when dial and gauge are reading the same (100 psig ± 2 psig, 7 bar ± 0,14 bar), turn adjusting knob to 20 psi (1,4 bar). Unit is calibrated when gauge reads 20 psig ± 5 psig (1,4 bar ± 0,34). (The ± 2 psig and ± 5 psig are accepted tolerances of the most commonly used gauges.)
   G. **DO NOT** adjust screw "A" more than one-half turn when calibrating unit. If unit has been properly lubricated and more than one-half turn is required to calibrate it, additional problems with unit are involved and unit should be returned to the vendor.

FRENCH

GARANTIE DU FABRICANT

Les produits du fabricant sont garantis contre toute malfaçon ou tout défaut d'exécution, lorsqu'on les emploie, les installe, les applique et les entretient en respectant les recommandations et spécifications écrites formulées par le fabricant. La garantie dure un an, à compter de la date d'expédition de l'usine. En vertu de cette garantie, l'obligation du fabricant et le seul recours contre une telle malfaçon ou un tel défaut, se limite à la réparation ou au remplacement (au gré du fabricant) des produits n'ayant subi aucune modification qui lui sont restitués, et sur lesquels on constate la malfaçon ou le défaut, sous réserve que ces derniers soit rapportés sans délai au fabricant au cours de ladite période d'un an.

IL S'AGIT DE LA SEULE GARANTIE QUE PERMET LE FABRICANT. ELLE REMPLACE TOUTE AUTRE GARANTIE OU DÉCLARATION EXPLICITE OU IMPLICITE, Y COMPRIS TOUTE GARANTIE IMPLICITE CONCERNANT LA VALEUR LOYALE ET MARCHANDE OU L'ADAPTABILITÉ À UN CERTAIN BUT, OU TOUTE AUTRE OBLIGATION DE LA PART DU FABRICANT. Les réclamations en vertu de la garantie doivent être présentées et seront traitées conformément à la procédure relative aux réclamations en vertu de la garantie établie chez le fabricant. Le fabricant ne saurait en aucun cas être tenu responsable d'une interruption des affaires, de pertes de bénéfices, de lésions physiques, des coûts découlant d'un retard, comme de toute autre perte, tout autre coût ou dommage déterminé, indirect, accessoire or consécutif.

⚠ AVERTISSEMENT ⚠

LIMITATIONS DE L'USAGE

Les garanties que présente le fabricant sont nulles et non avenues, et le fabricant décline la responsabilité relative à une perte, lésion, à un coût ou à un autre dommage quelconque en résultant, pour une unité de godet en plastique dont un protecteur de godet constitue l'équipement standard, et sauf indication contraire donnée par écrit par le fabricant en ce qui concerne des produits du fabricant servant à d'autres fins que le service d'air comprimé. Les avertissements spécifiques relatifs à ces limitations sur l'emploi, et toute autre limitation, figurent ailleurs dans cette notice.

VOUS avez choisi un produit de qualité et nous vous en remercions. Pour vous assurer d'un rendement et d'un fonctionnement parfaits, lisez ces instructions avant d'installer cet équipement.

INSTRUCTIONS IMPORTANTES CONCERNANT L'INSTALL DES RÉGULATEUR DIAL-AIR™

1. **NE PAS** installer l'appareil avant d'avoir lu dans son intégralité cette notice d'information sur le produit.
2. **SAUF** indication contraire du fabricant, cet appareil est prévu pour l'air comprimé. Tout emploi avec d'autres fluides (liquides ou gaz) est contre-indiqué. Ainsi, l'utilisation avec certains liquides ou gaz dangereux, ou leur injection, (alcool, gaz de pétrole liquéfié) peut être dangereux pour l'appareil, ou entraîner des risques d'explosion ou des fuites dangereuses. Les garanties du fabricant sont nulles en cas de mauvaise utilisation. Le fabricant dégage sa responsabilité en cas d'accident en découlant. La pression et la température maximales sont de 300 psig (21 bars) et 150°F (65,5°C).
3. **INSTALLER** l'appareil en amont et aussi près que possible de l'endroit où l'air régulé est nécessaire.
4. **INSTALLER** l'appareil de sorte que l'air circule dans le sens indiqué par la flèche sur la fonderie.
5. **NE PAS** diminuer le débit d'air par l'emploi de tuyauterie ou de raccords de dimensions insuffisantes, sauf si l'on désire un débit minimum.
6. **INSTALLER** le régulateur dans n'importe quelle position de rotation.
7. **LES ORIFICES DE RACCORDEMENT DU MANOMÈTRE** peuvent soit servir à monter un manomètre, soit servir de sortie supplémentaire pour l'air régulé. Obturer tout orifice non utilisé.
8. **LE MONTAGE SUR PANNEAU** impose un trou de 69 mm de diamètre, plus 4 trous de 5,5 mm pour les vis. L'appareil peut être monté sur des matériaux de 32 mm d'épaisseur maximum.
9. **NOUS CONSEILLONS** d'installer un filtre de 5 microns en amont du régulateur.
10. **POUR RÉGULER L'AIR**, tourner le bouton de réglage dans le sens des aiguilles d'une montre afin

83-528-000 REV 1 08/02
Printed in U.S.A.

FIGURE "A"

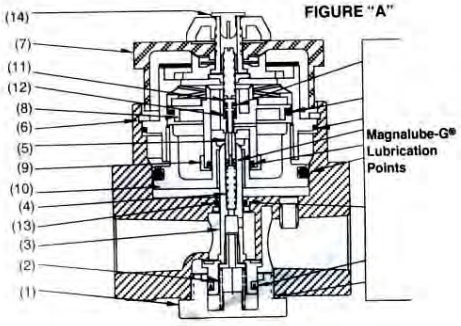

FIGURE "B"

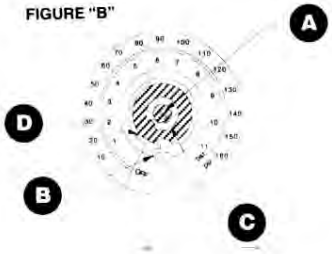

A CALIBRATION ADJUSTMENT SCREW
VIS DE RÉGLAGE DE LA CALIBRATION
EICHUNGSEINSTELLSCHRAUBE
VITE DI REGOLAZIONE DELLA TARATURA
TORNILLO DE AJUSTE DE CALIBRACIÓN

B DIAL SCREW
VIS DU CADRAN
SKALENSCHRAUBE
VITE DEL QUADRANTE
TORNILLO DEL CUADRANTE

C ADJUSTMENT COUPLING
ASSEMBLAGE DE LA SOUPAPE
VENTILAUFBAU
ACCOPPIAMENTO DI REGOLAZIONE
CUERPO DE LA VÁLVULA

D TIP
EMBOUT
SPITZE
ESTREMITÀ
LENGÜETA

IMPORTANT NOTE: As with any new product, everyone seems to have an urge to see how it works. All Dial-Air™ regulators have been factory-calibrated. Any "tinkering" with calibration settings easily can throw the unit out of calibration. For example, removing dial screw "B" and rotating "C" in either direction so that tip "D" passes the dial screw "B" will throw unit out of calibration.

REMARQUE IMPORTANTE : D'ordinaire, on désire savoir rapidement comment marche un nouvel article. Tous les régulateurs Dial-Air™ ont été calibrés en usine. Toute modification des réglages du calibrage peut facilement décalibrer l'appareil. Ainsi, enlever la vis du cadran B et tourner de telle façon que l'embout D dépasse la vis du cadran B, risque de décalibrer l'appareil.

WICHTIGER HINWEIS: Wir raten davon ab, die Regler zu verstellen. Alle Dial-Air™-Regler wurden in der Fabrik geeicht. Jedes Verstellen der Eicheinstellungen kann die Eichung des Geräts zerstören. Dies kann zum Beispiel dann geschehen, wenn die Skalenschraube „B" entfernt und „C" in eine beliebige Richtung gedreht wird, so daß dabei die Spitze „D" die Skalenschraube „B" passiert.

NOTA IMPORTANTE: Come capita per ogni nuovo prodotto, ognuno sembra avere urgenza di conoscerne il funzionamento. Tutti i regolatori Dial-Air™ sono stati tarati in fabbrica. Ogni tentativo di riparazione sull'apparecchio può facilmente metterlo fuori taratura. Per esempio, l'unità è fuori taratura se si toglie la vite del quadrante "B", si ruota "C" in entrambe le direzioni in modo che l'estremità "D" oltrepassi il punto "B".

NOTA IMPORTANTE: Al igual que con cualquier producto nuevo, el comprador deseará saber inmediatamente cómo funciona esta unidad. Todos los reguladores de aire Dial-Air™ se calibran en fábrica. Cualquier intento de "corrección" de la calibración podría fácilmente descalibrar completamente la unidad. Por ejemplo, si quitara el tornillo del cuadrante "B" y girara "C" en cualquier dirección, de modo que "D" pasara el tornillo del cuadrante "B", la unidad se descalibraría.

WILKERSON

83-528-000 REV 1 08/02

Dial-Air™ Regulators

MANUFACTURER'S WARRANTY

Manufacturer's products are warranted to be free from defects in material and workmanship under proper use, installation, application and maintenance in accordance with manufacturer's written recommendations and specifications for one year from the date of shipment from the factory. Manufacturer's obligation under this warranty is limited to and the sole remedy for any such defect shall be the repair or replacement (at manufacturer's option) of unaltered products returned to manufacturer and proven to have such defect, provided such defect is promptly reported to manufacturer within said one year period.

THIS IS THE ONLY AUTHORIZED MANUFACTURER'S WARRANTY AND IS IN LIEU OF ALL OTHER EXPRESS OR IMPLIED WARRANTIES OR REPRESENTATIONS, INCLUDING ANY IMPLIED WARRANTIES OF MERCHANTABILITY OR FITNESS, OR OF ANY OTHER OBLIGATIONS ON THE PART OF MANUFACTURER. Warranty claims must be submitted and shall be processed in accordance with manufacturer's established warranty claim procedure. In no event will manufacturer be liable for business interruptions, loss of profits, personal injury, costs of delay or for any other special indirect, incidental or consequential losses, costs or damages.

⚠ WARNING ⚠

USE LIMITATIONS

Manufacturer's warranties are void and manufacturer assumes no responsibility for any resulting cost, loss injury or any other damages whatsoever with respect to any plastic bowl unit for which a bowl guard is standard equipment if the unit is placed in service without the bowl guard and except as otherwise specified in writing by manufacturer with respect to any manufacturer's products which are used in other than compressed air service. Specific warnings with respect to these and other use limitations appear elsewhere in this product instruction sheet.

YOU have selected a quality product, and we appreciate it... To be assured of maximum performance and satisfaction please read these instructions before installing this product.

IMPORTANT INSTALLATION INSTRUCTIONS FOR DIAL-AIR™ REGULATORS

1. **DO NOT** install the unit until you have read this entire product information sheet.
2. **EXCEPT** as otherwise specified by manufacturer, this product is specifically designed for compressed air service, and use with any other fluid (liquid or gas) is a misapplication. For example, use with or injection of certain hazardous liquids or gases in the system (such as alcohol or liquid petroleum gas) could be harmful to unit or result in a combustible condition or hazardous external leakage. Manufacturer's warranties are void in the event of misapplication and manufacturer assumes no responsibility for any resulting loss. Maximum pressure and temperature ratings are 300 psig (21 bar) and 150°F (65.5°C).
3. **INSTALL** upstream of and as close as possible to where regulated air is needed.
4. **INSTALL** with air flow in direction of arrow on casting.
5. **DO NOT** restrict the air flow with undersize piping or fittings, unless maximum air flow is not needed.
6. **INSTALL** regulator in any rotational position.
7. **GAUGE PORTS** may be used for installing gauge or they may be used as additional regulated air outlet ports. Plug all unused ports.
8. **PANEL MOUNTING** requires a 2 11/16" (69 mm) diameter hole, and 4 7/32" (5.5 mm) screw holes. Unit can be mounted on material up to 1 1/4" (32 mm) thick.
9. **INSTALLATION** of a 5-micron rated filter upstream of regulator is recommended.
10. **TO REGULATE AIR** turn adjustment knob clockwise to raise the regulated air pressure and counterclockwise to lower the regulated air pressure.

IMPORTANT MAINTENANCE INSTRUCTIONS FOR DIAL-AIR™ REGULATORS

1. **BEFORE SERVICING THIS UNIT, READ THIS ENTIRE PRODUCT INFORMATION SHEET AND TURN OFF AIR SUPPLY AND VENT BOTH SIDES OF REGULATOR.**

LUBRICATION OF DIAL-AIR™ REGULATORS

1. **FOR TROUBLE-FREE OPERATION,** proper lubrication of the Dial-Air™ regulator **is essential.**
2. **WHEN ANY** of the following symptoms occur, **lubricate regulator with Magnalube-G®.** (See note) If Magnalube-G® **is not available, use** a heavy grease such as Parker O-ring Lube, Lubriplate, or Molykote, however, these lubricants "wash out" much sooner than Magnalube-G®. **NOTE:** Never use oil as a lubricant.
   - A. Excessive relief venting.
   - B. Inability to attain high secondary pressure.
   - C. Erratic secondary pressures.
   - D. Excessive hysteresis (a retardation of desired effect: in this case because of the lack of lubrication).
3. Refer to "Figure A" for steps 1 thru 10.
   1. Remove bottom plug (1), main valve spring (2), main valve (3), pilot valve spring (4), and pilot valve (5).
   2. Clean main valve molded rubber seat (Do not lubricate).
   3. Clean and lubricate bottom plug seal, main valve seal and pilot valve seal.
   4. Reassemble unit.
   5. If problem is not remedied, lubricate remaining seals. (See steps 6 thru 10)
   6. Remove retaining ring (6) and pull bonnet assembly (7) from unit.
   7. Remove upper piston (8), upper piston cup (9), lower piston (10), needle valve (11), and needle valve spring (12).
   8. Clean and lightly lubricate inside of body.
   9. Clean and lubricate upper piston seal, upper piston cup seal, lower piston seal, needle valve seal and main valve slide seal (13).
   10. Reassemble unit. If symptoms still exist, contact manufacturer.

RECALIBRATION OF DIAL-AIR™ REGULATORS

1. **DO NOT ATTEMPT TO CALIBRATE UNIT UNTIL ALL EIGHT SEALS HAVE BEEN PROPERLY LUBRICATED.**
2. **TO RECALIBRATE Dial-Air™ REGULATOR:**
   - A. **INSTALL** regulator on air line with at least 110 psig (7,5 bar) air pressure at the inlet port.
   - B. **INSTALL** an air pressure gauge to one of the gauge ports. Plug remaining gauge port with plug (supplied).
   - C. **REMOVE** lock button (Figure A, Item 14) from unit.
   - D. **TURN** adjusting knob to 100 psi (7 bar) setting.
   - E. **CHECK** the gauge for 100 psig (7 bar) reading. If gauge reads other than 100 psig (7 bar) adjust screw "A" (Fig. B) with a screwdriver while holding adjusting knob on 100 psi (7 bar) setting. If more than one-half turn of screw "A" is required to achieve 100 psig (7 bar), see "G" below.
   - F. **TO CHECK CALIBRATION ADJUSTMENT:** when dial and gauge are reading the same (100 psig ± 2 psig; 7 bar ± 0,14 bar), turn adjusting knob to 20 psi (1,4 bar). Unit is calibrated when gauge reads 20 psig ± 5 psig (1,4 bar ± 0,34). (The ± 2 psig and ± 5 psig are accepted tolerances of the most commonly used gauges.)
   - G. **DO NOT** adjust screw "A" more than one-half turn when calibrating unit. If unit has been properly lubricated and more than one-half turn is required to calibrate it, additional problems with unit are involved and unit should be returned to the vendor.

FRENCH

GARANTIE DU FABRICANT

Les produits du fabricant sont garantis contre toute malfaçon ou tout défaut d'exécution, lorsqu'on les emploie, les installe, les applique et les entretient en respectant les recommandations et spécifications écrites formulées par le fabricant. La garantie dure un an, à compter de la date d'expédition de l'usine. En vertu de cette garantie, l'obligation du fabricant et le seul recours contre une telle malfaçon ou un tel défaut, se limite à la réparation ou au remplacement (au gré du fabricant) des produits n'ayant subi aucune modification qui lui sont restitués, et sur lesquels on constate la malfaçon ou le défaut, sous réserve que ces derniers soit rapportés sans délai au fabricant au cours de ladite période d'un an.

IL S'AGIT DE LA SEULE GARANTIE QUE PERMET LE FABRICANT. ELLE REMPLACE TOUTE AUTRE GARANTIE OU DÉCLARATION EXPLICITE OU IMPLICITE, Y COMPRIS TOUTE GARANTIE IMPLICITE CONCERNANT LA VALEUR LOYALE ET MARCHANDE OU L'ADAPTABILITÉ À UN CERTAIN BUT, OU TOUTE AUTRE OBLIGATION DE LA PART DU FABRICANT. Les réclamations en vertu de la garantie doivent être présentées et seront traitées conformément à la procédure relative aux réclamations en vertu de la garantie établie chez le fabricant. Le fabricant ne saurait en aucun cas être tenu responsable d'une interruption des affaires, de pertes de bénéfices, de lésions physiques, des coûts découlant d'un retard, comme de toute autre perte, tout autre coût ou dommage déterminé, indirect, accessoire or consécutif.

⚠ AVERTISSEMENT ⚠

LIMITATIONS DE L'USAGE

Les garanties que présente le fabricant sont nulles et non avenues, si le fabricant décline la responsabilité relative à une perte, lésion, à un coût ou à un autre dommage quelconque en résultant, pour une unité de godet en plastique dont un protecteur de godet constitue l'équipement standard, et sauf indication contraire donnée par écrit par le fabricant en ce qui concerne des produits du fabricant servant à d'autres fins que le service d'air comprimé. Les avertissements spécifiques relatifs à ces limitations sur l'emploi, et toute autre limitation, figurent ailleurs dans cette notice.

VOUS avez choisi un produit de qualité et nous vous en remercions. Pour vous assurer d'un rendement et d'un fonctionnement parfaits, lisez ces instructions avant d'installer cet équipement.

INSTRUCTIONS IMPORTANTES CONCERNANT L'INSTALL DES RÉGULATEUR DIAL-AIR™

1. **NE PAS** installer l'appareil avant d'avoir lu dans son intégralité cette notice d'information sur le produit.
2. **SAUF** indication contraire du fabricant, cet appareil est prévu pour l'air comprimé. Tout emploi avec d'autres fluides (liquides ou gaz) est contre-indiqué. Ainsi, l'utilisation avec certains liquides ou gaz dangereux, ou leur injection, (alcool, gaz de pétrole liquéfié) peut être dangereux pour l'appareil, ou entraîner des risques d'explosion ou des fuites dangereuses. Les garanties du fabricant sont nulles en cas de mauvaise utilisation. Le fabricant **dégage sa responsabilité** en cas d'accident en découlant. La pression et la température maximales sont de 300 psig (21 bars) et 150°F (65.5°C).
3. **INSTALLER** l'appareil en amont et aussi près que possible de l'endroit où l'air régulé est nécessaire.
4. **INSTALLER** l'appareil de sorte que l'air circule dans le sens indiqué par la flèche sur la fonderie.
5. **NE PAS** diminuer le débit d'air par l'emploi de tuyauterie ou de raccords de dimensions insuffisantes, sauf si l'on désire un débit minimum.
6. **INSTALLER** le régulateur dans n'importe quelle position de rotation.
7. **LES ORIFICES DE RACCORDEMENT DU MANOMÈTRE** peuvent soit servir à monter un manomètre, soit servir de sortie supplémentaire pour l'air régulé. Obturer tout orifice non utilisé.
8. **LE MONTAGE SUR PANNEAU** impose un trou de 69 mm de diamètre, plus 4 trous de 5,5 mm pour les vis. L'appareil peut être monté sur des matériaux de 32 mm d'épaisseur maximum.
9. **NOUS CONSEILLONS** d'installer un filtre de 5 microns en amont du régulateur.
10. **POUR RÉGULER L'AIR**, tourner le bouton de réglage dans le sens des aiguilles d'une montre afin

83-528-000 REV 1 08/02
Printed in U.S.A.

FIGURE "A"

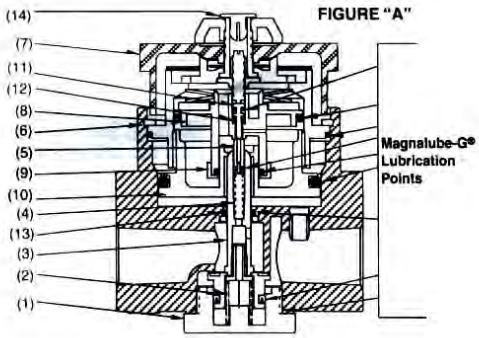

FIGURE "B"

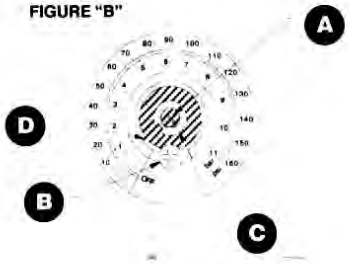

A CALIBRATION ADJUSTMENT SCREW
VIS DE RÉGLAGE DE LA CALIBRATION
EICHUNGSEINSTELLSCHRAUBE
VITE DI REGOLAZIONE DELLA TARATURA
TORNILLO DE AJUSTE DE CALIBRACIÓN

B DIAL SCREW
VIS DU CADRAN
SKALENSCHRAUBE
VITE DEL QUADRANTE
TORNILLO DEL CUADRANTE

C ADJUSTMENT COUPLING
ASSEMBLAGE DE LA SOUPAPE
VENTILAUFBAU
ACCOPPIAMENTO DI REGOLAZIONE
CUERPO DE LA VÁLVULA

D TIP
EMBOUT
SPITZE
ESTREMITÀ
LENGÜETA

IMPORTANT NOTE: As with any new product, everyone seems to have an urge to see how it works. All Dial-Air™ regulators have been factory-calibrated. Any "tinkering" with calibration settings easily can throw the unit out of calibration. For example, removing dial screw "B" and rotating "C" in either direction so that tip "D" passes the dial screw "B" will throw unit out of calibration.

REMARQUE IMPORTANTE : D'ordinaire, on désire savoir rapidement comment marche un nouvel article. Tous les régulateurs Dial-Air™ ont été calibrés en usine. Toute modification des réglages du calibrage peut facilement décalibrer l'appareil. Ainsi, enlever la vis du cadran B et tourner de telle façon que l'embout D dépasse la vis du cadran B, risque de décalibrer l'appareil.

WICHTIGER HINWEIS: Wir raten davon ab, die Regler zu verstellen. Alle Dial-Air™-Regler wurden in der Fabrik geeicht. Jedes Verstellen der Eicheinstellungen kann die Eichung des Geräts zerstören. Dies kann zum Beispiel dann geschehen, wenn die Skalenschraube „B" entfernt und „C" in eine beliebige Richtung gedreht wird, so daß dabei die Spitze „D" die Skalenschraube „B" passiert.

NOTA IMPORTANTE: Come capita per ogni nuovo prodotto, ognuno sembra avere urgenza di conoscerne il funzionamento. Tutti i regolatori Dial-Air™ sono stati tarati in fabbrica. Ogni tentativo di riparazione sull'apparecchio può facilmente metterlo fuori taratura. Per esempio, l'unità è fuori taratura se si toglie la vite del quadrante "B", si ruota "C" in entrambe le direzioni in modo che l'estremità "D" oltrepassi il punto "B".

NOTA IMPORTANTE: Al igual que con cualquier producto nuevo, el comprador deseará saber inmediatamente cómo funciona esta unidad. Todos los reguladores de aire Dial-Air™ se calibran en fábrica. Cualquier intento de "corrección" de la calibración podría fácilmente descalibrar completamente la unidad. Por ejemplo, si quitara el tornillo del cuadrante "B" y girara "C" en cualquier dirección, de modo que "D" pasara el tornillo del cuadrante "B", la unidad se descalibraría.

MSP 300

Stainless Steel Isolated Pressure Transducer

Low Cost OEM; 100% Leak Proof

No "0" Rings, No Silicon Oil, No Welds

The MSP 300 series pressure transducers from the Microfused™ line of MSI Sensors, a division of Measurement Specialties Inc., set a new price-performance standard for low cost, high volume, commercial and industrial applications. This series is suitable for measurement of liquid or gas pressure, even for difficult media such as contaminated water, steam, and mildly corrosive fluids.

The transducer pressure cavity is machined from a solid piece of 17-4 PH stainless steel. The standard version includes a $^1/_4$ NPT pipe thread allowing a leak-proof, all metal sealed system. There are no o-rings, welds or organics exposed to the pressure media. The durability is excellent.

MSI Sensors proprietary Microfused™ technology, derived from demanding aerospace applications, employs micromachined silicon piezoresistive strain gages fused with high temperature glass to a stainless steel diaphragm. This approach achieves media compatibility simply and while elegantly providing an exceptionally stable sensor without the p-n junctions of conventional micromachined sensors.

This product is geared to the OEM customer using medium to high volumes. The standard version is suitable for many applications, but the dedicated design team at our Transducer Engineering Center stands ready to provide a semi-custom design where the volume and application warrants.

FEATURES

- One-Piece Stainless Steel Construction
- Ranges up to 10,000 PSI or 700 BAR
- Millivolt or Amplified Outputs
- Excellent Accuracy
- Wide Operating Temperature Range

APPLICATIONS

- Pumps and Compressors
- Hydraulic/Pneumatic Systems
- Automotive Test Systems
- Energy and Water Management
- Pressure Instrumentation
- Refrigeration - Freon and Ammonia Based
- Agriculture - Sprayers and Dusters

Environmental Performance	
Operating temperature range	-4 to 185°F (-20 to 85°C), (For other temperature ranges consult factory)
Compensated temperature range	30 to 130°F (0 to 55°C)
Zero thermal error	<±2% of FS
Span thermal error	<±2% of FS
Storage temperature range	-40 to 185°F (-40 to 85°C)
Shock	50g, 11msec half sine shock per MIL standard 202F, method 213 B, condition A
Vibration	±20g MIL-STD-810C, Procedure 514.2, Figure 514.2-2, curve L

msisensors
innovation • performance • reliability

Schaevitz
ICSensors
Microfused
Piezo Film

mechanical specifications

Performance at 77° F (25° C)		
Pressure range	0 to 100, 250, 500, 1000, 2500, 5000, 10000 PSI (0 to 7, 17, 35, 70, 175, 350, 700 BAR) (For additional ranges consult factory)	
Accuracy (combined linearity, hysteresis and repeatability)	<1% of FS (for higher accuracy consult factory)	
Media compatibility	17-4 PH stainless steel (for other material consult factory)	
Pressure ports	1/4" NPT (for other ports consult factory)	
Pressure cycles	>10⁸ full pressure cycles	
Pressure overload	2X rated pressure	
Burst pressure	5X or 20000 PSI whichever is less	
Long term stability (1 year)	±0.25% FS (Typical)	
Electrical:		
Supply voltage	5VDC	10-30VDC
Supply current	<10mA	<15mA
Outputs	0-100mVDC, ratiometric to supply (2)	1-5VDC, fixed (4)
	0.5-4.5VDC, ratiometric to supply (3)	4-20mA, two wire (5)
Interface	2 ft. of PVC jacketed cable (for other options consult factory)	
Zero offset	±3% of FS for 0-100mV/±2% for amplified (for tighter tolerances consult factory)	
Span tolerance	±2% of FS (for tighter tolerances consult factory)	
Output load	1M Ohm for millivolt output/ 5K Ohm min for high level voltage	
	0 Ohms @ 10V (1000 ohms @ 30V) for 4-20mA	
Noise	<2mVRMS - for amplified	
Bandwith (-3dB)	DC to 1KHz - for amplified	

ordering information

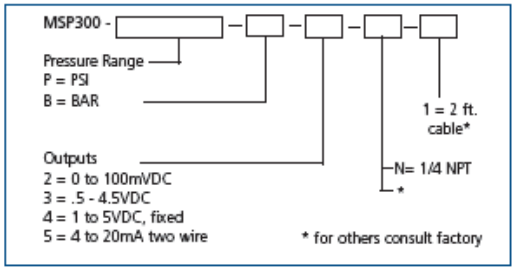

Electrical Connections:

Outputs:	2		3/4		5	
	Red	+Supply	Red	+Supply	Red	+Supply
	Black	-Supply	Black	Ground	Black	Return
	White	-Output	White	Output		
	Green	+Output				

mechanical dimensions

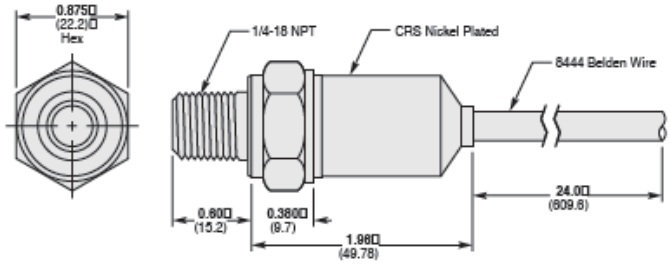

internet:www.msisensors.com
Tel: 1-757-766-1500
North America Toll Free: 1-800-745-8008
Fax: 1-757-766-4297
RevB 3/19/04

JAMESBURY
NELES CONTROLS GROUP

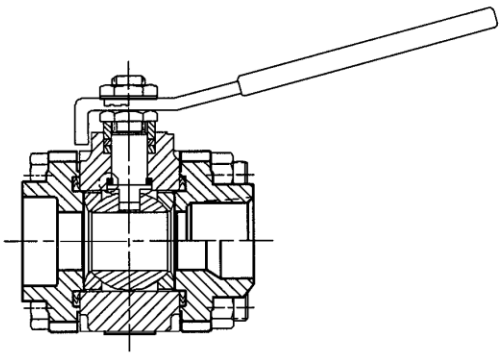

IMO - 202
ISSUE 5/97

1/2" - 2" SERIES 4000
3 PIECE BALL VALVES

INSTALLATION, MAINTENANCE AND OPERATING INSTRUCTIONS

WARNING

FOR YOUR SAFETY, TAKE THE FOLLOWING PRECAUTIONS BEFORE REMOVING THE VALVE FROM THE LINE, OR BEFORE ANY DISASSEMBLY:

1. DURING REMOVAL AND DISASSEMBLY, WEAR ANY PROTECTIVE EQUIPMENT NORMALLY REQUIRED TO PROTECT AGAINST DISCHARGE OF TRAPPED FLUID.

2. DEPRESSURIZE THE LINE AND VALVE AS FOLLOWS:

A. PLACE THE VALVE IN THE OPEN POSITION AND DRAIN THE LINE.

B. CYCLE THE VALVE TO RELIEVE RESIDUAL PRESSURE IN THE BODY CAVITY BEFORE REMOVAL FROM THE LINE.

C. AFTER REMOVAL, AND BEFORE ANY DISASSEMBLY, CYCLE THE VALVE AGAIN SEVERAL TIMES.

3. **SEAT AND BODY RATINGS -** THE PRACTICAL AND SAFE USE OF THIS PRODUCT IS DETERMINED BY BOTH THE SEAT AND BODY RATING. READ THE NAME TAG AND CHECK BOTH RATINGS. THIS PRODUCT IS AVAILABLE WITH A VARIETY OF SEAT MATERIALS. SOME OF THE SEAT MATERIALS HAVE PRESSURE RATINGS THAT ARE **LESS THAN** THE BODY RATINGS. ALL OF THE BODY AND SEAT RATINGS ARE DEPENDENT ON **VALVE TYPE AND SIZE, SEAT MATERIAL, BOLTING MATERIAL, AND TEMPERATURE.** DO NOT EXCEED THESE RATINGS.

NOTE: OPTIONAL ROUND AND OVAL HANDLES ARE AVAILABLE FOR THESE VALVES IN PLACE OF LEVER HANDLES.

INSTALLATION

1. **Screwed End Style -** Use standard piping practices to install valves with threaded end caps. When tightening valve to pipe, apply wrench to end cap nearest the pipe being worked.

2. **Weld End Style -** All standard weld end valves must be partially disassembled prior to welding. Follow Steps 1, 2, 4 and 5 of **DISASSEMBLY**. Socket weld ends are per ANSI B16.11 and butt weld ends are per ANSI B16.25. Welding should be done using procedures and welders qualified under Section IX of the ASME Boiler and Pressure Vessel Code. **IMPORTANT: If the body seals (6) are removed for welding, DO NOT MIX THEM. When reassembling the valve, put each seal back into the groove from which it was removed.**

CAUTION: IF THE VALVE IS BEING DISASSEMBLED FOR WELDING, DO NOT CUT OR SCRATCH THE SEATS, SEALS AND SEALING SURFACES.

3. After valve is in line, or before testing, tighten stem nuts (16) 1/4 turn.

MAINTENANCE

Routine maintenance consists of tightening the lower stem nut 1/4 turn periodically to compensate for the wear caused by the stem turning against the stem seals. The upper stem nut should be tightened a corresponding amount. When tightening stem seals on actuated valves, where the valve is connected to the actuator with a no-play (clamped) coupling, loosen the coupling before tightening the stem nut. Retighten the coupling. Overhaul maintenance consists of replacing seats and seals. A standard service kit consisting of these parts may be obtained from your Neles-Jamesbury, Inc. distributor (see Table 3).

DISASSEMBLY

The Series 4000 ball valve is designed to be serviced in or out of the line. The following instructions are for in-line disassembly. (For bench disassembly, which may be more convenient, follow a similar sequence).

1. Comply fully with the instructions in the WARNING section on page one.

2. Be sure to cycle the valve. Leave in the open position. The body center section will not swing out in the closed position.

3. Remove the top stem nut (16), spring tab washer (9) and handle (15).

4. Loosen all four body bolts/tie rods (20). Remove three from the valve. Leave the remaining bolt in place with the nut backed off at least 1/4".

5. For positive alignment and ease of in-line assembly, each end cap is interlocked approximately 1/16" into the body as shown in Figure 3. To overcome this feature during in-line disassembly it is necessary to separate each cap at least 1/16" from the body. Sharply rap body and caps with a block of wood or plastic mallet to break loose body seal. Spread end caps and swing the body out of the line. If pipe does not allow simple spreading, remove the remaining body bolt and rotate center section per Figure 1. This will improve access to the end cap flange for ease of spreading. Swing the valve body (1) out from between the end caps (2). Be careful not to damage the sealing surfaces "A" (see Figure 3) at each end of the valve.

6. Turn the stem (4) so that the valve is fully closed. Remove body seals (6) and seats (5). Body seals may be tightly compressed in their grooves. Use extreme care when prying them out. Damage such as scratches to the bottom of the groove will cause leaks. If the seats are not easily removed, gently tap the ball (30) with a piece of wood or other soft material.

7. Remove the ball (3).

8. Remove the lower stem nut (16) and the compression ring (18).

9. Press the stem (4) from the top into the valve body (1) and remove it through the end of the body.

10. Carefully pry out and discard the old stem seals (7), the stem bearings (8), and the secondary seal (13), being careful not to damage the bearing surfaces.

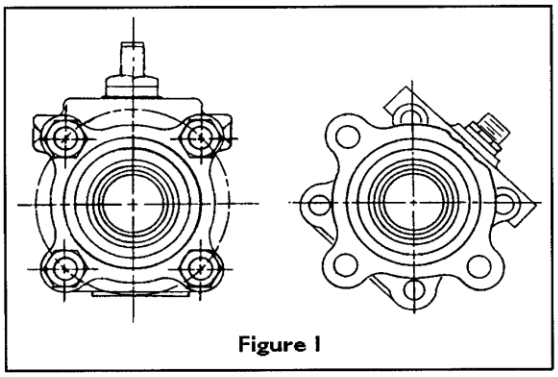

Figure 1

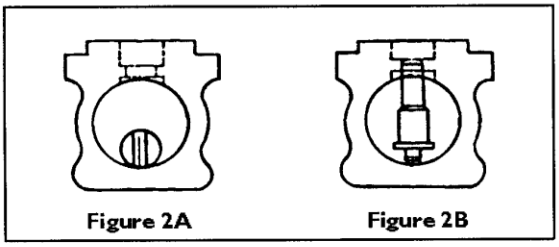

Figure 2A Figure 2B

ASSEMBLY

The following instructions are for in-line assembly. For bench assembly, which may be more convenient, follow a similar sequence by holding the valve in a vise by one end cap. Use care not to cut or scratch the seats, seals or sealing surface.

1. With the valve swung to the out-of-line position, insert from the inside of the body a stem bearing (8), a secondary seal (13), then another stem bearing (8) into the stem bore. For non Fire-Tested valves use one stem bearing (8). See Figure 3 and parts list.

2. Insert the stem (4) horizontally into the body bore (threaded end first). The blade at the ball end of the stem must be vertical (see Figure 2A and 2B). Guide the stem into the stem hole being careful not to scratch the bearings.

3. Holding the stem in place from the bottom, install two stem seals (7), a compression ring (18) from the outside and thread on one stem nut (16) until the stem starts to turn.

4. Place a wrench through the body on the bottom stem blade to hold the stem stationary. Place another wrench on the stem nut and turn the nut down until the seals are bottomed and the stem comes snugly into place, applying the torque shown in Table 2. As an alternate to using a torque wrench, tighten until snug plus an additional 1/4-1/2 turn.

5. Align the stem blade with the ball slot. Insert the ball (3), and rotate the stem (4) to the ball closed position.

6. Working at either end of the body (1), place a seat (5) into the body. Fit it snugly against the closed ball. **NOTE:** The sealing surface of the seat is toward the ball (See Figure 4).

7. Place a body seal (6) into the machined sealing groove of the end cap (2) (see Figure 3). Be certain the groove and seal are clean.

8. Repeat instructions 6 and 7 for assembly at the opposite end.

9. Turn the stem to the full ball open position.

10. Swing the entire body assembly back into the properly aligned and interlock position between the end caps, being careful not to scratch the body seals. Caps may have to be spread slightly to accept the body.

11. Close the valve.

12. Bolt the valve together with lubricated body bolts (20) and nuts (19). Tighten these bolts evenly and alternately. (See Table 1 for the torques and lubricant.)

13. Attach the handle (15), the spring tab washer (9) and secure them with the stem nut (16). (See Table 2 for torques.)

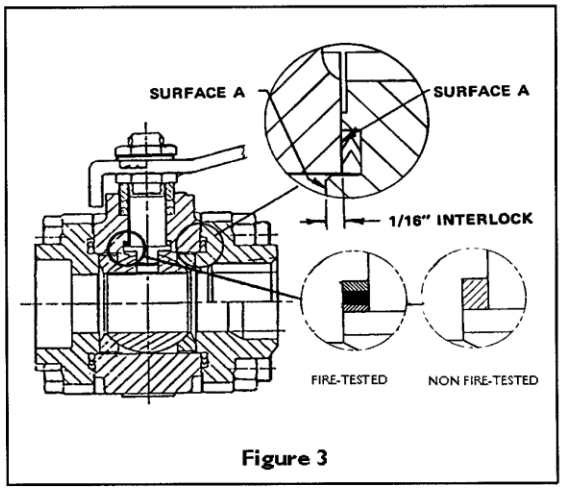

Figure 3

Table I

Required Fastener Torque, LB.-FT. (Except as Noted)

Fastener (Last Digit in Fig. No.)		-1	-2	-4	-5	-7	-8	-3
Valve Size-Full Port Size in ( )	Fastener Material	A193 GR.B7	A194 GR.B8	K-Monel®	A193 GR.B7M	A320 GR.L7M.	A453 GR.660	Series 300 St.Stl.
	Fastener Ident. Mark	B7	B8	K	B7M	L7M	660A OR 660B	⊖
1/2" (1/2")		8 - 10	8 - 10	7 - 9	6 - 8	6 - 8	6- 8	48- 60 LB.-IN.
3/4"		17 - 21	16 - 20	15 - 18	14 - 17	13 - 16	14 - 17	8 - 10
1" (3/4")		31 - 38	29 -36	26 -33	25 - 31	23 - 29	25 -31	14 -18
1 1/4" (1")		35 - 43	33 -41	30 -37	28 -35	26 - 33	28 - 35	16 - 21
1 1/2" (1 1/4")		74 - 93	71 - 89	64 -80	60 - 75	57 - 71	60 - 75	35 - 44
2" (1 1/2")		84 - 105	80 - 100	72 -90	68 -85	64 -80	68 - 85	40 - 50

NOTES:

1. Lubricate threads with Never-Seez® or equivalent.
2. Fastener materials have different corrosion, thermal and strength properties and should not be mixed. The fastener identification and coding must be in agreement with the valve identification plate, item 29.
3. Torque values are for lubricated, **unplated** fasteners.

® **MONEL** is a registered trademark of Inco.

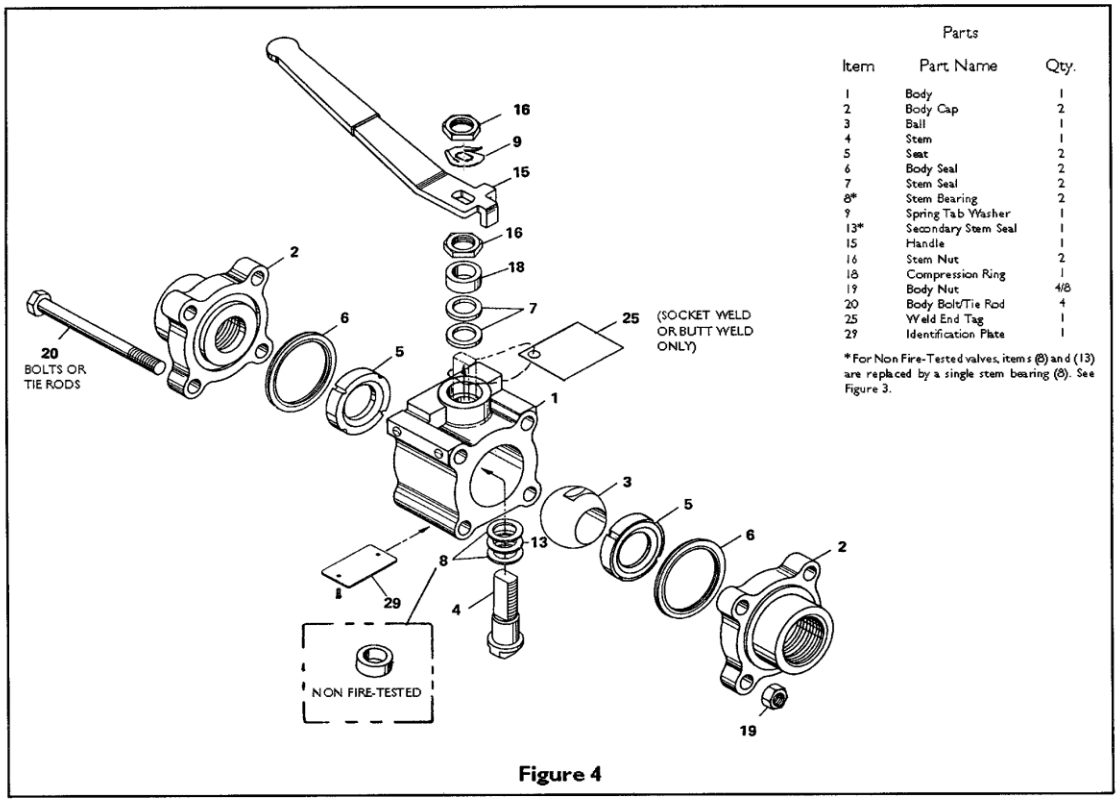

Parts

Item	Part Name	Qty.
1	Body	1
2	Body Cap	2
3	Ball	1
4	Stem	1
5	Seat	2
6	Body Seal	2
7	Stem Seal	2
8*	Stem Bearing	2
9	Spring Tab Washer	1
13*	Secondary Stem Seal	1
15	Handle	1
16	Stem Nut	2
18	Compression Ring	1
19	Body Nut	4/8
20	Body Bolt/Tie Rod	4
25	Weld End Tag	1
29	Identification Plate	1

*For Non Fire-Tested valves, items (8) and (13) are replaced by a single stem bearing (8). See Figure 3.

Figure 4

4

SERVICE KITS

NOTE: FIRE-TESTED service kits include two seats (5), two stem seals (7), two stem bearings (8), a secondary seal (13) and two 316 stainless steel/graphite body seals (6). The body seals are suitable for valves with carbon steel or 316 stainless trim.

NOTE: NON FIRE-TESTED service kits include two seats (5), one stem bearing (8) and two body seals (6). The body seals are suitable for valves with carbon steel or 316 stainless trim.

Table 2

Stem Nut Torque

Valve Size - Full Port Size In ( )	LB. - IN.
1/2" - 3/4" (1/2")	50 - 60
1" - 1 1/4" (3/4" - 1")	60 - 72
1 1/2" - 2" (1 1/4" - 1 1/2")	135 - 145

Table 3

Service Kits	Valve Size - Full Port Size Shown in ( ) **FOR FIRE -TESTED VALVES**					
VALVE SIZE	1/2" (1/2")	3/4"	1" (3/4")	1 1/4" (1")	1 1/2" (1 1/4")	2" (1 1/2")
TFE SEATS	RKN-107-TT	RKN-108-TT	RKN-109-TT	RKN-110-TT	RKN-111-TT	RKN-112-TT
FILLED TFE SEATS	RKN-107-MT	RKN-108-MT	RKN-109-MT	RKN-110-MT	RKN-111-MT	RKN-112-MT
DELRIN SEATS	RKN-107-RT	RKN-108-RT	RKN-109-RT	RKN-110-RT	RKN-111-RT	RKN-112-RT
PEEK SEATS	RKN-107-LT	RKN-108-LT	RKN-109-LT	RKN-110-LT	RKN-111-LT	RKN-112-LT
METAL SEATS	RKN-107-DH	RKN-108-DH	RKN-109-DH	RKN-110-DH	RKN-111-DH	RKN-112-DH

Service Kits	Valve Size - Full Port Size Shown in ( ) **FOR NON FIRE-TESTED VALVES**					
VALVE SIZE	1/2" (1/2")	3/4"	1" (3/4")	1 1/4" (1")	1 1/2" (1 1/4")	2" (1 1/2")
TFE SEATS	RKN-137-TT	RKN-138-TT	RKN-139-TT	RKN-140-TT	RKN-141-TT	RKN-142-TT
FILLED TFE SEATS	RKN-137-MT	RKN-138-MT	RKN-139-MT	RKN-140-MT	RKN-141-MT	RKN-142-MT
UHMW POLY SEATS	RKN-137-UB	RKN-138-UB	RKN-139-UB	RKN-140-UB	RKN-141-UB	RKN-142-UB

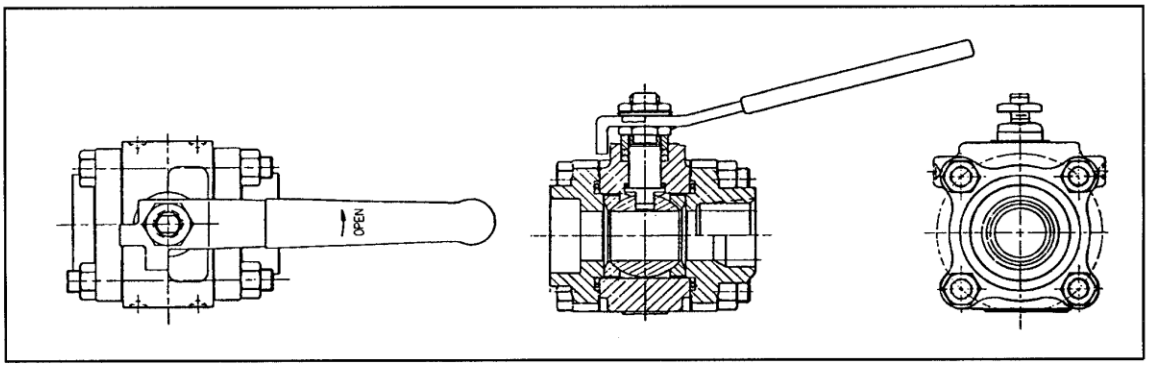

JAMESBURY
NELES CONTROLS GROUP

Installation & Maintenance Instructions

2–WAY DIRECT–ACTING SOLENOID VALVES
NORMALLY OPEN OR NORMALLY CLOSED OPERATION
BRASS OR STAINLESS STEEL CONSTRUCTION – 1/8", 1/4", OR 3/8" NPT

SERIES
8262
8263

Form No.V5256R8

IMPORTANT: See separate solenoid installation and maintenance instructions for information on: Wiring, Solenoid Temperature, Causes of Improper Operation, and Coil or Solenoid Replacement.

DESCRIPTION

Series 8262 and 8263 valves are 2–way direct–acting general service solenoid valves. Valves bodies are of rugged brass or stainless steel. Series 8262 or 8263 valves may be provided with a general purpose or explosionproof solenoid enclosure. Series 8262 and 8263 valves with suffix "P" in the catalog number are designed for dry inert gas and non–lubricated air service.

OPERATION

Normally Open: Valve is open when solenoid is de–energized; closed when is energized.
Normally Closed: Valve is closed when solenoid is de–energized; open when energized.
IMPORTANT: No minimum operating pressure required.

Manual Operation

Manual operator allows manual operation when desired or during an electrical power outage. Depending upon basic valve construction, three types of manual operators are available:

Push Type Manual Operator

To engage push type manual operator, push stem at base of valve body upward as far as possible. Valve will now be in the same position as when the solenoid is energized. To disengage manual operator, release stem. Manual operator will return to original position.

Screw Type Manual Operator

To engage screw type manual operator, rotate stem at base of the valve body clockwise until it hits a stop. Valve will now be in the same position as when the solenoid is energized. To disengage, rotate stem counterclockwise until it hits a stop.

⚠ **CAUTION: For valve to operate electrically, manual operator stem must be fully rotated counterclockwise.**

Stem/Lever Type Manual Operator

To engage manual operator, turn stem/lever clockwise until it hits a stop. Valve will now be in the same position as when the solenoid is energized. To disengage manual operator, turn stem/lever counterclockwise until it hits a stop.

⚠ **CAUTION: For valve to operate electrically, manual operator stem/lever must be fully rotated counterclockwise.**

Flow Metering Devices

Valves with suffix "M" in catalog number are provided with a metering device for flow control. Turn stem to right to reduce flow; left to increase flow.

INSTALLATION

Check nameplate for correct catalog number, pressure, voltage, frequency, and service. Never apply incompatible fluids or exceed pressure rating of the valve. Installation and valve maintenance to be performed by qualified personnel.
Note: Inlet port will either be marked "I" or "IN". Outlet port will be marked "2" or "OUT".

Future Service Considerations.

Provision should be made for performing seat leakage, external leakage, and operational tests on the valve with a nonhazardous,noncombustible fluid after disassembly and reassembly.

Temperature Limitations

For maximum valve ambient and fluid temperatures, refer to charts below. Check catalog number, coil prefix, suffix, and watt rating on nameplate to determine the maximum temperatures.

Wattage	Catalog Number Coil Prefix	Coil Class	Max. Ambient Temp. °F	Max. Fluid Temp. °F
6, 10.5, 12.4	none, DA or S	A	77	180
6,10.5 12.4	DF, FT or SF	F	125	180
6,10.5, 12.4	HT	H	140	180
9,10.7	none, DP or SP	F	77	180
9.7	none, FT or HT	A, F or H	77	120
11.2	none, FT or HT	A, F or H	77	150
16.7	none, DP or SP	F	77	200
17.1	none, KP SP or SD	F	125	180
17.1	HB, KB SS or SV	H	140	180

Catalog Nos.8262B200 and 8262 C200 AC construction only and Catalog Nos.8262B214 and 8262 D200 AC and DC construction are limited to 140°F fluid temperature.
Valves with Suffix V or W that are designed for AC service and normally closed operation are for use with No. 2 and 4 fuel oil service. These valves have the same maximum temperatures per the above table except Suffix W valves are limited to a maximum fluid temperature of 140°F.
Listed below are valves with Suffix V in the catalog number that are acceptable for higher temperatures.

Catalog Number Coil Prefix	Max. Ambient Temp.°F	Max. Fluid Temp.°F
FT8262, HB8262 FT8263, HB8263 8262G, 8263G	125	250*
HT or HB 8262G HT or HB 8263G	140	250

*The only exception is the 8262G and 8263G series (Class F coil) at 50 Hertz rated 11.1 and 17.1 watts are limited to 210°F fluid temperature.

Positioning

This valve is designed to perform properly when mounted in any position. However, for optimum life and performance, the solenoid should be mounted vertically and upright to reduce the possibility of foreign matter accumulating in the solenoid base sub–assembly area.

© Automatic Switch Co. MCMXCIII. All Rights Reserved
Printed in Mexico

ASCO Valves Automatic Switch Co. 50–60 Hanover Road, Florham Park, New Jersey 07932

Valves with suffix "P" in the catalog number must be mounted with the solenoid vertical and upright.

Mounting
Refer to Figure 2 for mounting dimensions.

Piping
Connect piping or tubing to valve according to markings on valve body. Inlet port will either be marked "I" or "IN". Outlet port will be marked "2" or "OUT". Wipe the pipe threads clean of cutting oils. Apply pipe compound sparingly to male pipe threads only. If applied to valve threads, the compound may enter the valve and cause operational difficulty. Avoid pipe strain by properly supporting and aligning piping. When tightening the pipe, do not use valve or solenoid as a lever. Locate wrenches applied to valve body or piping as close as possible to connection point.

IMPORTANT: To protect the solenoid valve, install a strainer or filter suitable for the service involved, in the inlet side as close to the valve as possible. Clean periodically depending on service conditions. See ASCO Series 8600, 8601 and 8602 for strainers.

MAINTENANCE

⚠ WARNING: To prevent the possibility of personal injury or property damage, turn off electrical power, depressurize valve, and vent fluid to a safe area before servicing the valve.

NOTE: It is not necessary to remove the valve from the pipeline for repairs.

Cleaning
All solenoid valves should be cleaned periodically. The time between cleanings will vary depending on the medium and service conditions. In general, if the voltage to the coil is correct,sluggish valve operation, excessive noise or leakage will indicate that cleaning is required. In the extreme case, faulty valve operation will occur and the valve may fail to open or close. Clean strainer or filter when cleaning the valve.

Preventive Maintenance
- Keep the medium flowing through the valve as free from dirt and foreign material as possible.
- While in service, the valve should be operated at least once a month to insure proper opening and closing.
- Depending on the medium and service conditions, periodic inspection of internal valve parts for damage or excessive wear is recommended. Thoroughly clean all parts. If parts are worn or damaged, install a complete ASCO Rebuild Kit.

Causes of Improper Operation
- **Incorrect Pressure:** Check valve pressure. Pressure to valve must be within range specified on nameplate.
- Excessive Leakage: Disassemble valve (see Maintenance) and clean all parts. If parts are worn or damaged, install a complete ASCO Rebuild Kit.

Valve Disassembly
1. Disassemble valve using exploded views for identification of parts.
2. Remove solenoid, see separate instructions.
3. Unscrew solenoid base sub–assembly or valve bonnet with special wrench adapter supplied in ASCO Rebuild Kit. For wrench adapter only, order No. K218948. Remove core assembly, core spring, and solenoid base gasket from valve body. For normal maintenance on Series 8263 valves it is not necessary to remove valve seat. See Figure 1 for metering or manual operator constructions.
4. For normally open construction (Figure 3) remove end cap, or manual operator, (not shown) end cap gasket, disc holder spring, and disc holder assembly.
5. All parts are now accessible to clean or replace. If parts are worn or damaged, install a complete ASCO Rebuild Kit.

Valve Reassembly
1. Use exploded views for identification, orientation and placement of parts.
2. Lubricate all gaskets with DOW CORNING® 111 Compound lubricant or an equivalent high–grade silicone grease.
3. For normally open construction (Figure 3), install disc holder assembly, disc holder spring, end cap gasket and end cap or manual operator. For valves with 1/8" NPT, torque end cap or manual operator to 90 ± 10 in–lbs [10,2 ± 1,1 Nm]. For all other valves torque end cap or manual operator to 175 ± 25 in–lbs [19,8 ± 2,8 Nm].
4. For Series 8263 apply a small amount of LOCTITE® PST® pipe sealant to threads of valve seat (if removed). Follow manufacturers instructions for application of pipe sealant. Then install valve seat and torque to 75 ± 10 in–lbs [8,5 ± 1,1 Nm].
5. Replace solenoid base gasket, core assembly with core spring and solenoid base sub–assembly or plugnut/core tube sub–assembly and valve bonnet. Note: For core assemblies with internal type core springs, install wide end of core spring in core assembly first, closed end of core spring protrudes from top of core assembly.
6. For 1/8" NPT valve constructions, Torque valve bonnet to 90 ± 10 in–lbs [10,2 ± 1,1 Nm]. Torque solenoid base sub–assembly to 175 ± 25 in–lbs [19,8 ± 2,8 Nm].
7. Install solenoid, see separate solenoid instructions. Then make electrical hookup to solenoid.

⚠ WARNING: To prevent the possibility of personal injury or property damage, check valve for proper operation before returning to service. Also perform internal seat and external leakage tests with a nonhazardous, noncombustible fluid.

8. Restore line pressure and electrical power supply to valve.
9. After maintenance is completed, operate the valve a few times to be sure of proper operation. A metallic *click* signifies the solenoid is operating.

ORDERING INFORMATION FOR ASCO REBUILD KITS

Parts marked with an asterisk (*) in the exploded view are supplied in Rebuild Kits. When Ordering Rebuild Kits for ASCO valves, order the Rebuild Kit number stamped on the valve nameplate. If the number of the kit is not visible, order by indicating the number of kits required, and the Catalog Number and Serial Number of the valve(s) for which they are intended.

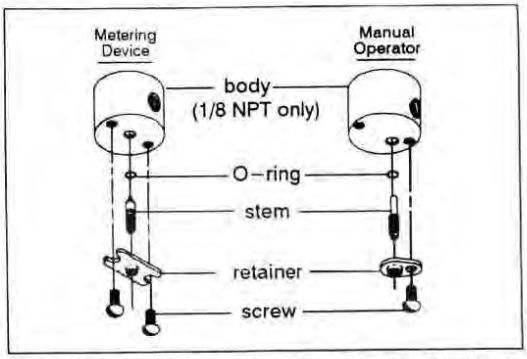

Figure 1. Metering and manual operator constructions.

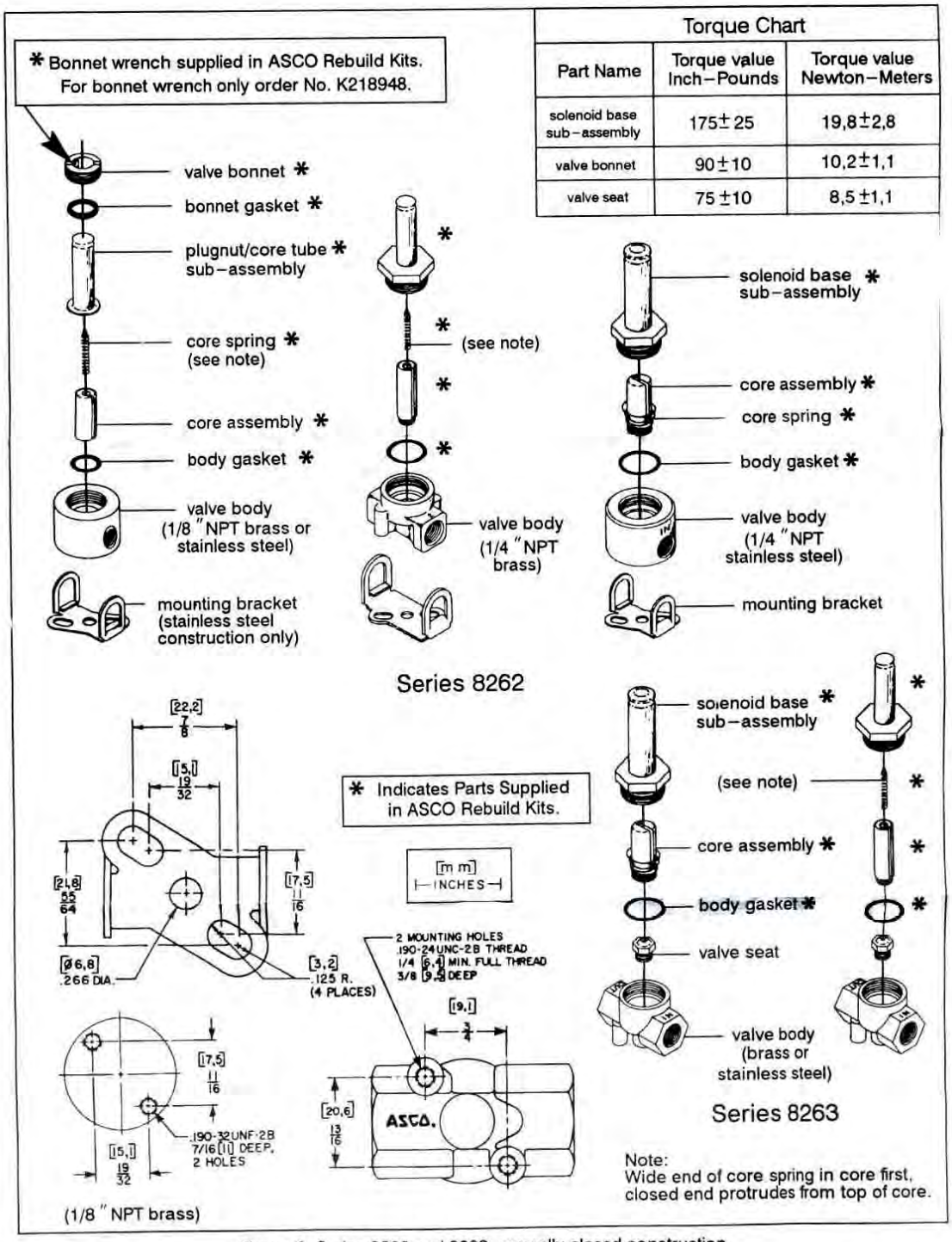

Torque Chart		
Part Name	Torque value Inch–Pounds	Torque value Newton–Meters
solenoid base sub–assembly	175±25	19,8±2,8
valve bonnet	90±10	10,2±1,1
valve seat	75±10	8,5±1,1

Figure 2. Series 8262 and 8263, normally closed construction.

Form No.V5256R8

Page 3 of 4

ASCO Valves Automatic Switch Co. 50–60 Hanover Road, Florham Park, New Jersey 07932

Disassembly and Reassembly of Stem /Lever Type Manual Operator (Refer to Figure 3)

NOTE: There are two stem/lever manual operator constructions. They are identified by the location of the core spring as ***internal*** or ***external*** spring construction.

1. Unscrew solenoid base sub–assembly from manual operator body.
2. Unscrew manual operator body from valve body. Then remove body gasket and stem retainer.
3. Slip stem/spacer sub–assembly with stem gasket from manual operator body. Remove core assembly with core spring from center of manual operator body.
4. All parts are now accessible for cleaning or replacement. Lubricate gaskets per ***Valve Reassembly*** step 2.
5. Position core assembly with core spring into base of manual operator body. Then install stem/spacer sub–assembly into manual operator body to engage with core assembly.
6. Reinstall stem retainer on body and stem/spacer sub–assembly.

IMPORTANT: The spacer on the stem/spacer sub–assembly must be *inside* of the stem retainer for *internal* spring construction and *outside* the stem retainer for *external* spring construction.

7. Replace body gasket and install manual operator assembly in valve body. Torque manual operator body to 175 ± 25 in–lbs [19,8 ± 2,8 Nm].
8. Replace solenoid base gasket and solenoid base sub–assembly. Torque solenoid base sub–assembly to 175 ± 25 in–lbs [19,8 ± 2,8 Nm].
9. Check manual operator for proper operation. Turn stem clockwise and counterclockwise; stem should turn freely without binding.

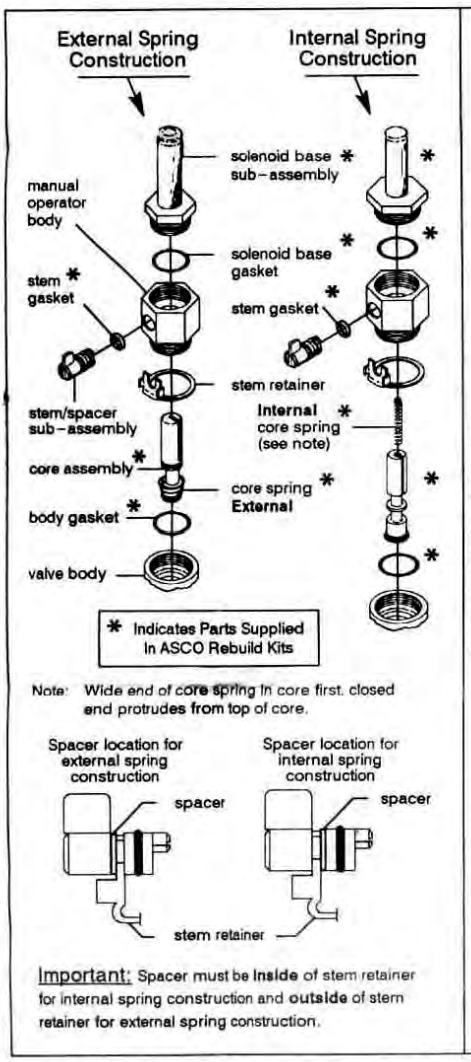

Figure 3. Stem/lever type manual operators

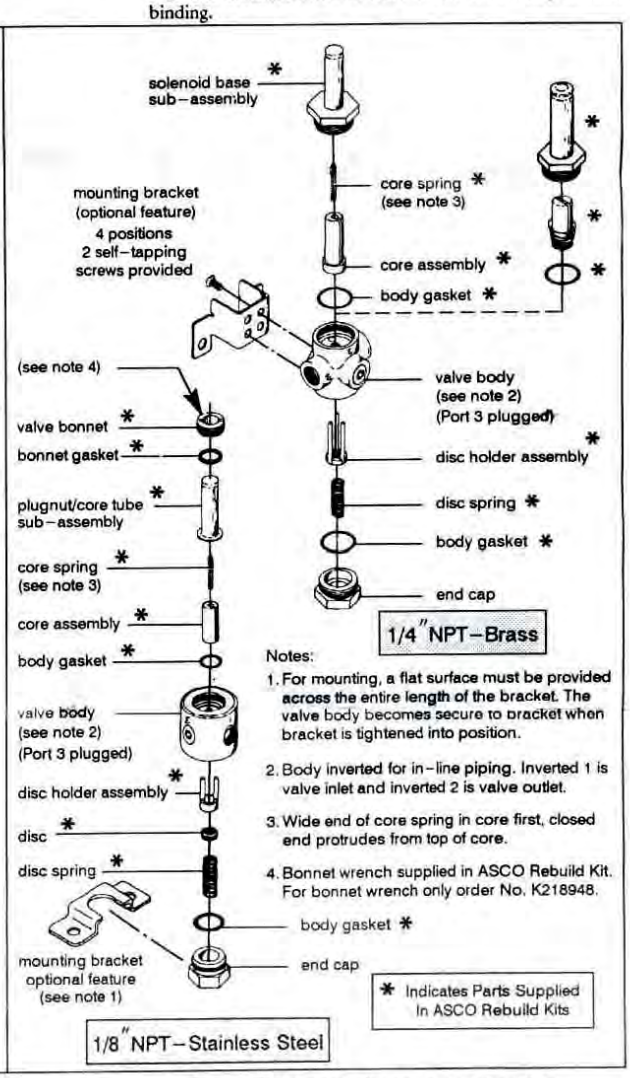

Figure 4. Series 8262, normally open construction.

Page 4 of 4 Form No.V5256R8

ASCO Valves Automatic Switch Co. 50–60 Hanover Road, Florham Park, New Jersey 07932

Installation & Maintenance Instructions

OPEN–FRAME SOLENOIDS

SERIES
U8003
US8003

Form No.V6918

NOTICE: See separate valve installation and maintenance instructions for information on: Operation, Positioning, Mounting, Piping, Strainer or Filter Requirements, Flow Controls, Cleaning, Preventive Maintenance, Causes of Improper Operation, Disassembly and Reassembly of Basic Valve.

DESCRIPTION

Series U8003 are open–frame, pull type solenoid operators. When installed just as a solenoid and not attached to an ASCO valve, the core has a 0.250–28 UNF–2B tapped hole with 0.38 minimum full thread for DC construction and 0.62 for AC construction.

Series US8003 open–frame solenoid operators are the same as Series U8003 except they are provided with spade terminal coils.

OPERATION

When the solenoid is energized, the core is drawn into the solenoid base sub–assembly.

IMPORTANT: When the solenoid is de–energized, the initial return force for the core, whether developed by spring, pressure or weight, must exert a minimum force to overcome residual magnetism created by the solenoid. Minimum return force for AC construction is 1 pound 5 ounces and 5 ounces for DC construction.

INSTALLATION

Check nameplate for correct catalog number, voltage, frequency, wattage and service.

⚠ CAUTION: To protect the solenoid valve or operator, install a strainer or filter, suitable for the service involved in the inlet side as close to the valve or operator as possible. Clean periodically depending on service conditions. See ASCO Series 8600, 8601 and 8602 for strainers.

⚠ WARNING: To prevent the possibility of electrical shock from the accessibility of live parts, install the open–frame solenoid in an enclosure.

Positioning

This solenoid is designed to perform properly when mounted in any position. However, for optimum life and performance, the solenoid should be mounted vertically and upright to reduce the possibility of foreign matter accumulating in the solenoid base sub–assembly area.

If open–frame solenoid is supplied on an ASCO valve, check basic valve instructions for positioning.

Mounting

Refer to Figure 1 (below) for mounting.

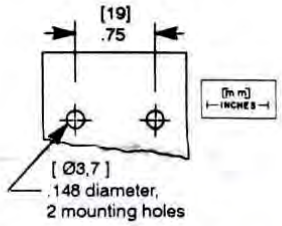

⚠ CAUTION: Be sure mounting screws do not penetrate yoke far enough to damage coil.

Figure 1. Yoke mounting dimension (partial view).

Wiring

Wiring must comply with local codes and the National Electrical Code. Coils are provided with lead wires or 1/4" spade terminals. The solenoid yoke is provided with a hole for a grounding screw, see Figure 2. Grounding screw not supplied with solenoid. To facilitate wiring, the solenoid may be rotated 360° by removing the retaining cap, clip or hi–shock clip.

⚠ CAUTION: When metal retaining clip disengages, it will spring upward.

Rotate solenoid enclosure to desired position. Then replace retaining cap, clip or hi–shock clip before operating. Be sure hi–shock retaining clip seat in circular groove around side wall of solenoid base sub–assembly. Tighten retaining clip securely so that the retaining clip ends meet.

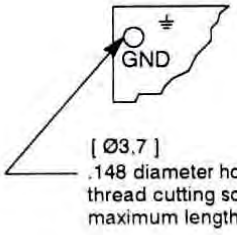

Figure 2. Hole for grounding screw (partial view).

© Automatic Switch Co. MCMXCV All Rights Reserved.

Printed in Mexico

ASCO Valves Automatic Switch Co. 50–60 Hanover Road Florham Park, New Jersey 07932

Note: Alternating current (AC) and direct current (DC) solenoids are built differently. To convert from one to the other, it is necessary to change the complete solenoid including the core and solenoid base sub–assembly, not just the coil. Consult ASCO.

Solenoid Enclosure Assembly

Catalog Numbers U80031, U80032, US80031 and US80032 open–frame solenoids may be assembled as a complete unit. Tightening is accomplished by means of a hex flange at the base of the solenoid.

⚠ CAUTION: Care must be taken not to mar the upper core surface, when installing core or positioning solenoid.

Solenoid Temperature

Standard solenoids are supplied with coils designed for continuous duty service. When the solenoid is energized for a long period, the solenoid yoke becomes hot and can not be touched by hand only for an instant. This is a safe operating temperature. Any excessive heating will be indicated by the smoke and odor of burning coil insulation.

MAINTENANCE

⚠ WARNING: To prevent the possibility of personal injury or property damage, turn off electrical power, depressurize solenoid operator or valve, and vent fluid to a safe area before servicing.

Cleaning

All solenoid operators and valves should be cleaned periodically. The time between cleanings will vary depending on the medium and service conditions. In general, if the voltage to the coil is correct, sluggish valve operation, excessive noise or leakage will indicate that cleaning is required. In the extreme case, faulty operation will occur and the solenoid operator or valve may fail to shift. Clean strainer or filter when cleaning the operator or valve.

Preventive Maintenance

- Keep the medium flowing through the solenoid operator or valve as free from dirt and foreign material as possible.
- While in service, the solenoid operator or valve should be operated at least once a month to insure proper opening and closing.
- Depending on the medium and service conditions, periodic inspection of internal valve parts for damage or excessive wear is recommended. Thoroughly clean all parts. Replace any worn or damaged parts.

Causes of Improper Operation

- **Faulty Control Circuit:** Check the electrical system by energizing the solenoid. A metallic *click* signifies that the solenoid is operating. Absence of the *click* indicates loss of power supply. Check for loose or blown fuses, open–circuited or grounded solenoid, broken lead wires or splice connections.
- **Burned–Out Coil:** Check for open–circuited coil. Replace if necessary. Check supply voltage; it must be the same as specified on nameplate and marked on the coil. Check ambient temperature and check the core is not jammed.
- **Low Voltage:** Check voltage across the coil leads. Voltage must be at least 85% of rated voltage.

Coil Replacement/Solenoid Disassembly

1. Disassemble solenoid in an orderly fashion using exploded views for identification and placement of parts.
2. Disconnect coil lead wires from power supply and grounding wire from yoke.
3. Remove retaining cap, clip or hi–shock clip and spacer from top of solenoid.

⚠ CAUTION: When metal retaining clip disengages, it will spring upward.

4. Slip yoke containing coil, spring washer and insulating washers off the solenoid base sub–assembly. Insulating washers are omitted when a molded coil is used.
5. Remove coil, spring washer and insulating washers (if present) from yoke.

Note: For panel mount hi–shock construction (Figure 5) remove additional parts as required.

6. For additional disassembly, unscrew solenoid base sub–assembly.
7. Refer to basic valve instructions for further disassembly.

Coil Replacement/Solenoid Reassembly

1. Install solenoid base sub–assembly and torque to 175 ± 25 in–lbs [19,8 ± 2,8 Nm].
2. Reassemble open–frame solenoid following exploded views.
3. For solenoid using a hi–shock retaining clip be sure retaining clip seats in circular groove around side wall of solenoid base sub–assembly. Then tighten retaining clip securely so that the retaining clip ends meet.
4. Make electrical connections to solenoid, see *Wiring* section.

⚠ CAUTION: Solenoid must be fully reassembled because the yoke and internal parts complete the magnetic circuit. Be sure to replace insulating washer at each end of non–molded coil.

ORDERING INFORMATION

FOR SOLENOID OPERATORS OR COILS

When Ordering Solenoid Operators or Coils, specify Catalog Number, Serial Number, Voltage and Frequency. For Coils, specify number stamped on coil (if visible).

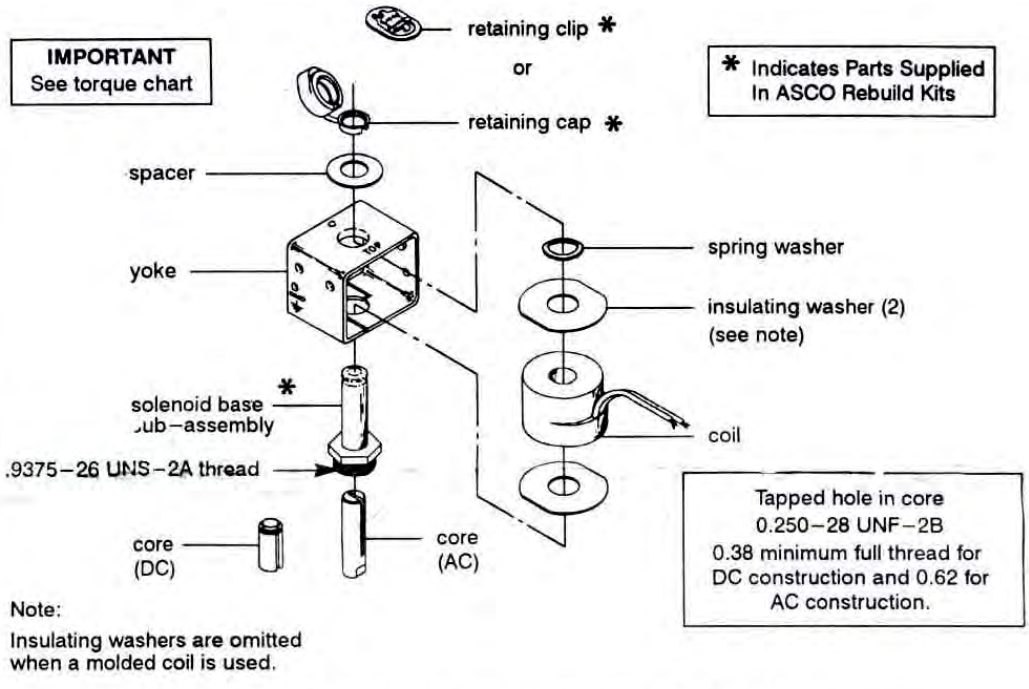

Figure 3. Series U8003 open–frame solenoid with leaded coil.

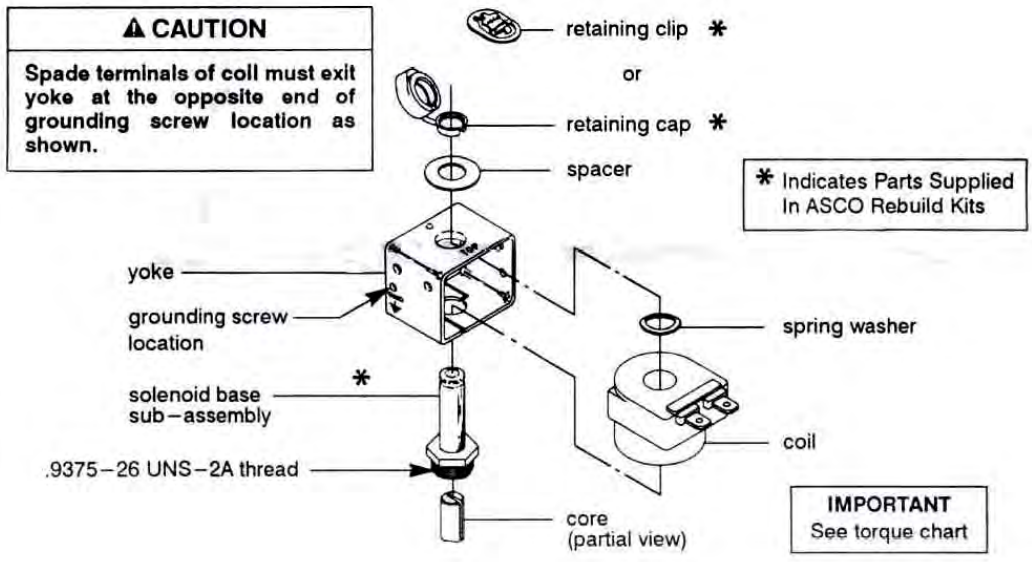

Figure 4. Series US8003 open–frame solenoid with 1/4" spade terminal coil.

Form No.V6918 Page 3 of 4

ASCO Valves Automatic Switch Co. 50–60 Hanover Road, Florham Park, New Jersey 07932

Torque Chart

Part Name	Torque Value Inch–Pounds	Torque Value Newton–Meters
Solenoid base sub–assembly	175 ± 25	19,8 ± 2,8

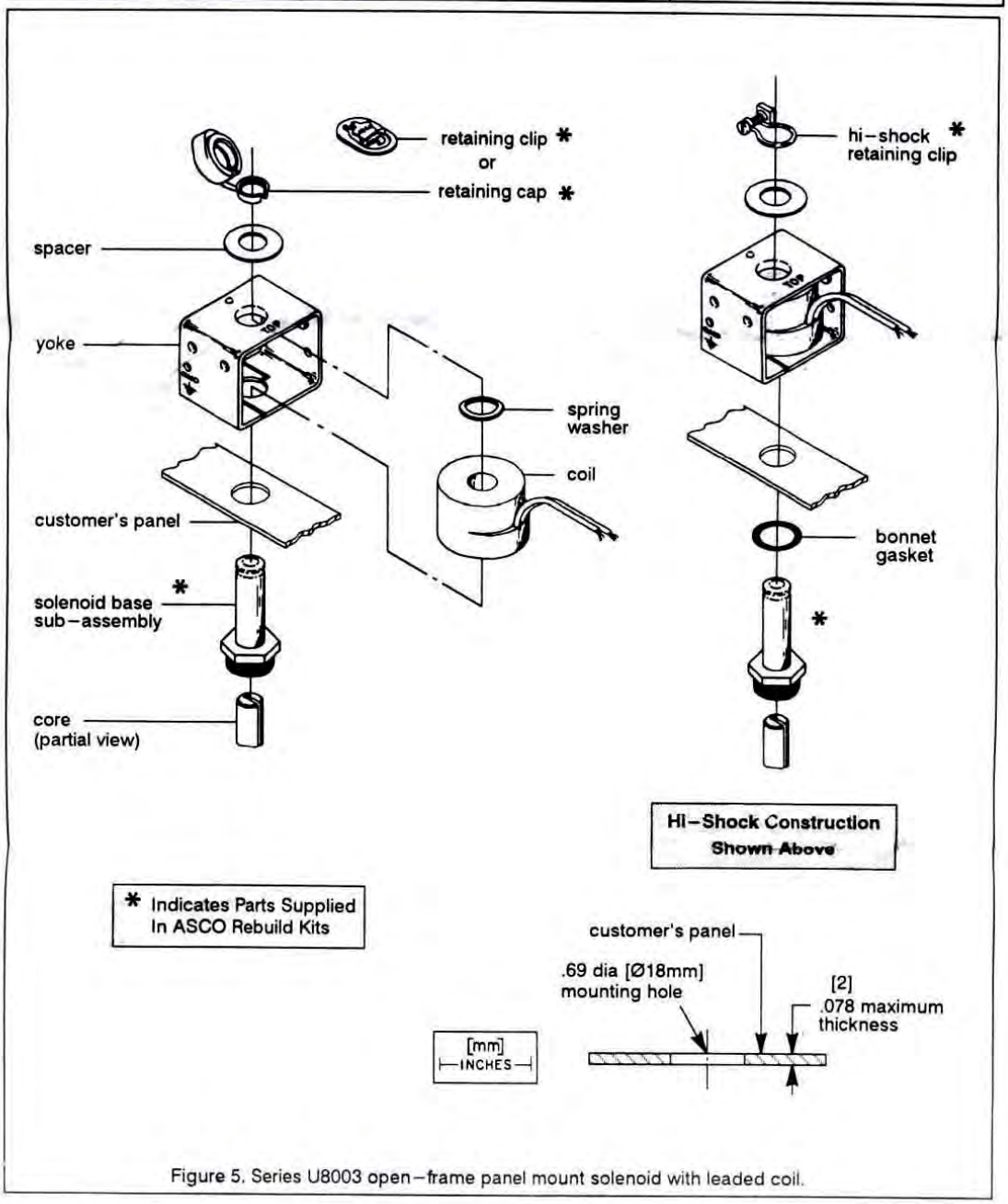

Figure 5. Series U8003 open–frame panel mount solenoid with leaded coil.

Page 4 of 4 Form No.V6918

ASCO Valves Automatic Switch Co. 50–60 Hanover Road Florham Park, New Jersey 07932

INSTALLATION AND MAINTENANCE INSTRUCTIONS

2-WAY INTERNAL PILOT OPERATED SOLENOID VALVES HUNG DIAPHRAGM – 3/8, 1/2 AND 3/4 N.P.T. NORMALLY CLOSED OPERATION

BULLETINS
8210
8211

ASCO

Form No. V-5825

DESCRIPTION

Bulletin 8210's are 2-way, normally closed, internal pilot operated solenoid valves. Valve body and bonnet are of brass construction. Standard valves have a General Purpose, NEMA Type 1 Solenoid Enclosure.

Bulletin 8211's are the same as Bulletin 8210's except the solenoids are equipped with an enclosure which is designed to meet NEMA Type 4 Watertight, NEMA Type 7 (C or D) Hazardous Locations - Class I, Group C or D, and NEMA Type 9 (E, F or G) Hazardous Locations - Class II, Group E, F or G. The explosion-proof/watertight solenoid enclosure is shown on a separate sheet of Installation and Maintenance Instructions, Form No. V-5380.

Bulletin 8210 and 8211 valves with suffix 'HW' in the catalog number are specifically designed for hot water service.

Construction	Coil Class	Catalog Number Prefix	Maximum Ambient Temp. °F.	Maximum Fluid Temp. °F.
A-C Construction (Alternating Current)	A	None or DA	77	180
	F	DF or FT	122	180
	H	HT	140	180
D-C Construction (Direct Current)	A, F or H	None, FT or HT	77	150
Catalog Numbers Suffixed 'HW' A-C Construction (Alternating Current)	A	None or DA	77	210
	F	DF or FT	77	210
	H	HT	122	210

OPERATION

Normally Closed: Valve is closed when solenoid is de-energized and opens when solenoid is energized.

MANUAL OPERATOR (Optional)

Valves with suffix 'MO' in catalog number are provided with a manual operator which allows manual operation when desired or during an interruption of electrical power. To operate valve manually, push in knurled cap and rotate clockwise 180° Disengage manual operator by rotating knurled cap counterclockwise 180° before operating electrically.

MANUAL OPERATOR LOCATION (Refer to Figure 3)

Manual operator (when shipped from factory) will be located over the valve outlet. Manual operator may be relocated at 90° increments by rotating valve bonnet. Remove bonnet screws (4) and rotate valve bonnet with solenoid to desired position. Replace bonnet screws (4) and torque in a crisscross manner to 110 ± 10 inch pounds.

If valve is installed in system and is operational, proceed in the following manner:

WARNING: Depressurize valve and turn off electrical power supply.

1. Remove retaining cap or clip and slip the entire solenoid enclosure off the solenoid base sub-assembly. CAUTION: When metal retaining clip disengages, it will spring upwards.
2. Remove bonnet screws (4) and rotate valve bonnet to desired position.
3. Replace bonnet screws (4) and torque in a crisscross manner to 110 ± 10 inch pounds.
4. Replace solenoid enclosure and retaining clip or cap.

INSTALLATION

Check nameplate for correct catalog number, pressure, voltage and service.

TEMPERATURE LIMITATIONS

For maximum valve ambient and fluid temperatures refer to chart. The temperature limitations listed are for UL applications. For non UL applications, higher ambient and fluid temperature limitations are available. Consult factory. Check catalog number on nameplate to determine maximum temperatures.

POSITIONING/MOUNTING

Valve may be mounted in any position. For mounting bracket (optional feature) dimensions, refer to Figure 1.

PIPING

Connect piping to valve according to markings on valve body. Apply pipe compound sparingly to male pipe threads only; if applied to valve threads, it may enter the valve and cause operational difficulty. Pipe strain should be avoided by proper support and alignment of piping. When tightening the pipe do not use valve as a lever. Wrenches applied to valve body or piping are to be located as close as possible to connection point. **IMPORTANT: Valves with suffix 'HW' in the catalog number have a special diaphragm material which is specifically compounded for hot water service. This material can be attacked by oil and grease. Wipe the pipe threads clean of cutting oils and use teflon tape to seal pipe joints.**

IMPORTANT: For the protection of the solenoid valve, install a strainer or filter suitable for the service involved in the inlet side as close to the valve as possible. Periodic cleaning is required depending on the service conditions. See Bulletins 8600, 8601 and 8602 for strainers.

WIRING

Wiring must comply with Local and National Electrical Codes. Housings for all solenoids are provided with connections for 1/2 inch conduit. The general purpose solenoid enclosure may be rotated to facilitate wiring by removing the retaining cap or clip. CAUTION: When metal retaining clip disengages it will spring upwards. Rotate to desired position. Replace retaining cap or clip before operating.

NOTE: Alternating Current (A-C) and Direct Current (D-C) Solenoids are built differently. To convert from one to the other, it is necessary to change the complete solenoid including the solenoid base sub-assembly and core assembly.

SOLENOID TEMPERATURE

Standard catalog valves are supplied with coils designed for continuous duty service. When the solenoid is energized for a long period, the solenoid enclosure becomes hot and can be touched with the hand for only an instant. This is a safe operating temperature. Any excessive heating will be indicated by the smoke and odor of burning coil insulation.

MAINTENANCE

WARNING: Turn off electrical power and depressurize valve before making repairs. It is not necessary to remove valve from pipe line for repairs.

ASCO Valves ASCO

Form No. V-5825 1975 Automatic Switch Co. FLORHAM PARK, NEW JERSEY 07932

© Automatic Switch Co. 1975, ALL RIGHTS RESERVED.

CLEANING

A periodic cleaning of all solenoid valves is desirable. The time between cleanings will vary, depending on media and service conditions. In general, if the voltage to the coil is correct, sluggish valve operation, excessive leakage or noise will indicate that cleaning is required.

PREVENTIVE MAINTENANCE

1. Keep the medium flowing through the valve as free from dirt and foreign material as possible.
2. While in service, operate valve at least once a month to insure proper opening and closing.
3. Periodic inspection (depending on media and service conditions) of internal valve parts for damage or excessive wear is recommended. Thoroughly clean all parts. Replace any parts that are worn or damaged.

IMPROPER OPERATION

1. **Faulty Control Circuit:** Check electrical system by energizing solenoid. A metallic click signifies the solenoid is operating. Absence of the click indicates loss of power supply. Check for loose or blown-out fuses, open circuited or grounded coil, broken lead wires or splice connections.
2. **Burned-Out Coil:** Check for open circuited coil. Replace coil if necessary.
3. **Low Voltage:** Check voltage across coil leads. Voltage must be at least 85% of nameplate rating.
4. **Incorrect Pressure:** Check valve pressure. Pressure to the valve must be within range specified on nameplate.
5. **Excessive Leakage:** Disassemble valve and clean all parts. Replace worn or damaged parts with a complete Spare Parts Kit for best results.

COIL REPLACEMENT (Refer to Figure 2)

Turn off electrical power supply and disconnect coil leads. Proceed in the following manner:

1. Remove retaining cap or clip, nameplate and cover. CAUTION: When metal retaining clip disengages, it will spring upwards.
2. Remove spring washer, insulating washer and coil. Insulating washers are omitted when a molded coil is used.
3. Reassemble in reverse order of disassembly paying careful attention to exploded view provided for identification and placement of parts.

CAUTION: Solenoid must be fully reassembled as the housing and internal parts are part of and complete the magnetic circuit. Place insulating washer at each end of coil if required.

VALVE DISASSEMBLY (Refer to Figures 2 and 3)

Depressurize valve and turn off electrical power supply. Proceed in the following manner:

1. Remove retaining cap or clip and slip the entire solenoid enclosure off the solenoid base sub-assembly. CAUTION: When metal retaining clip disengages, it will spring upwards.
2. Unscrew solenoid base sub-assembly and remove bonnet gasket.
3. Remove valve bonnet screws (4) and valve bonnet.
4. For normal maintenance, it is not necessary to disassemble the manual operator (optional feature) unless external leakage is evident. To disassemble remove stem pin, manual operator stem, stem spring and stem gasket.
5. Remove core spring, core/diaphragm sub-assembly and body gasket. CAUTION: Do not damage or distort hanger spring between core/diaphragm sub-assembly.
6. All parts are now accessible for cleaning or replacement. Replace worn or damaged parts with a complete Spare Parts Kit for best results.

VALVE REASSEMBLY

1. Reassemble in reverse order of disassembly paying careful attention to exploded views provided for identification and placement of parts.
2. Replace body gasket and core/diaphragm sub-assembly. Locate the bleed hole in core/diaphragm sub-assembly approximately 45° from the valve outlet.
3. Replace core spring with wide end in core first; closed end protrudes from top of core.
4. If removed, replace manual operator stem, stem spring, stem gasket and stem pin.
5. Replace valve bonnet and bonnet screws (4). Torque bonnet screws (4) in a crisscross manner to 110 ± 10 inch pounds.
6. Replace bonnet gasket and solenoid base sub-assembly. Put solenoid base sub-assembly to 175 ± 25 inch pounds.
7. Replace solenoid enclosure and retaining cap or clip.
8. After maintenance, operate the valve a few times to be sure of proper opening and closing.

SPARE PARTS KITS

Spare Parts Kits and Coils are available for ASCO valves. Parts marked with an asterisk (*) are supplied in Spare Parts Kits.

ORDERING INFORMATION FOR SPARE PARTS KITS
When Ordering Spare Parts Kits or Coils Specify Valve Catalog Number, Serial Number and Voltage.

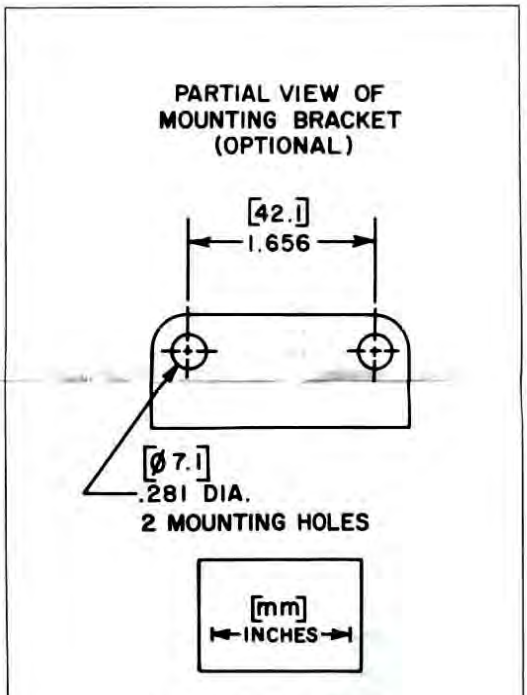

Figure 1. Dimensions For Mounting Bracket (Optional Feature)

ASCO Valves
Automatic Switch Co. FLORHAM PARK, NEW JERSEY 07932 Form No. V-5825 1975

© Automatic Switch Co. 1975, ALL RIGHTS RESERVED

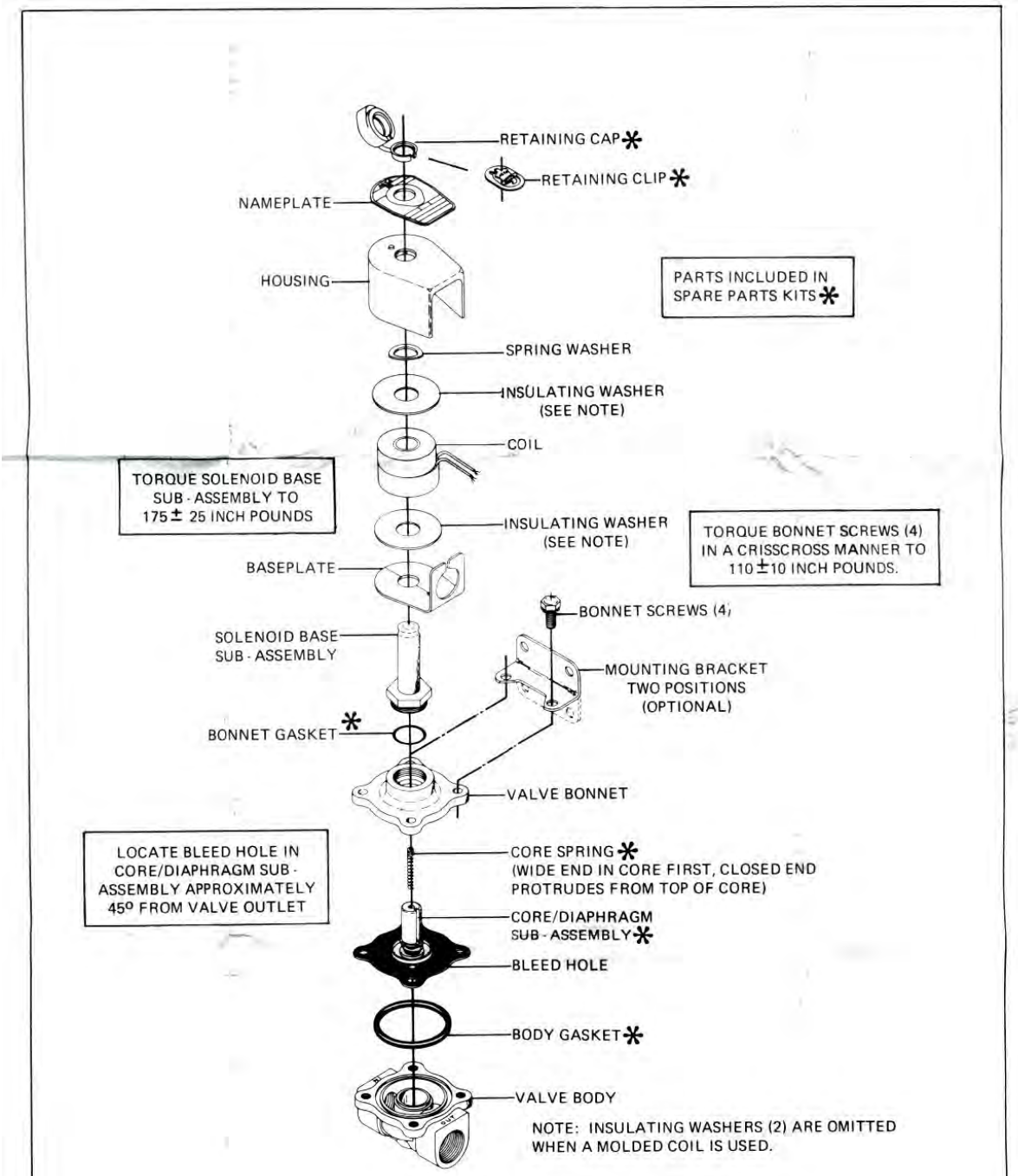

Bulletin 8210 — 3/8, 1/2 & 3/4 N.P.T. — A-C Construction
General purpose solenoid enclosure shown.
For explosion-proof/watertight solenoid enclosure used on Bulletin 8211, see Form No. V-5380.

Figure 2.

© Automatic Switch Co. 1978, ALL RIGHTS RESERVED.

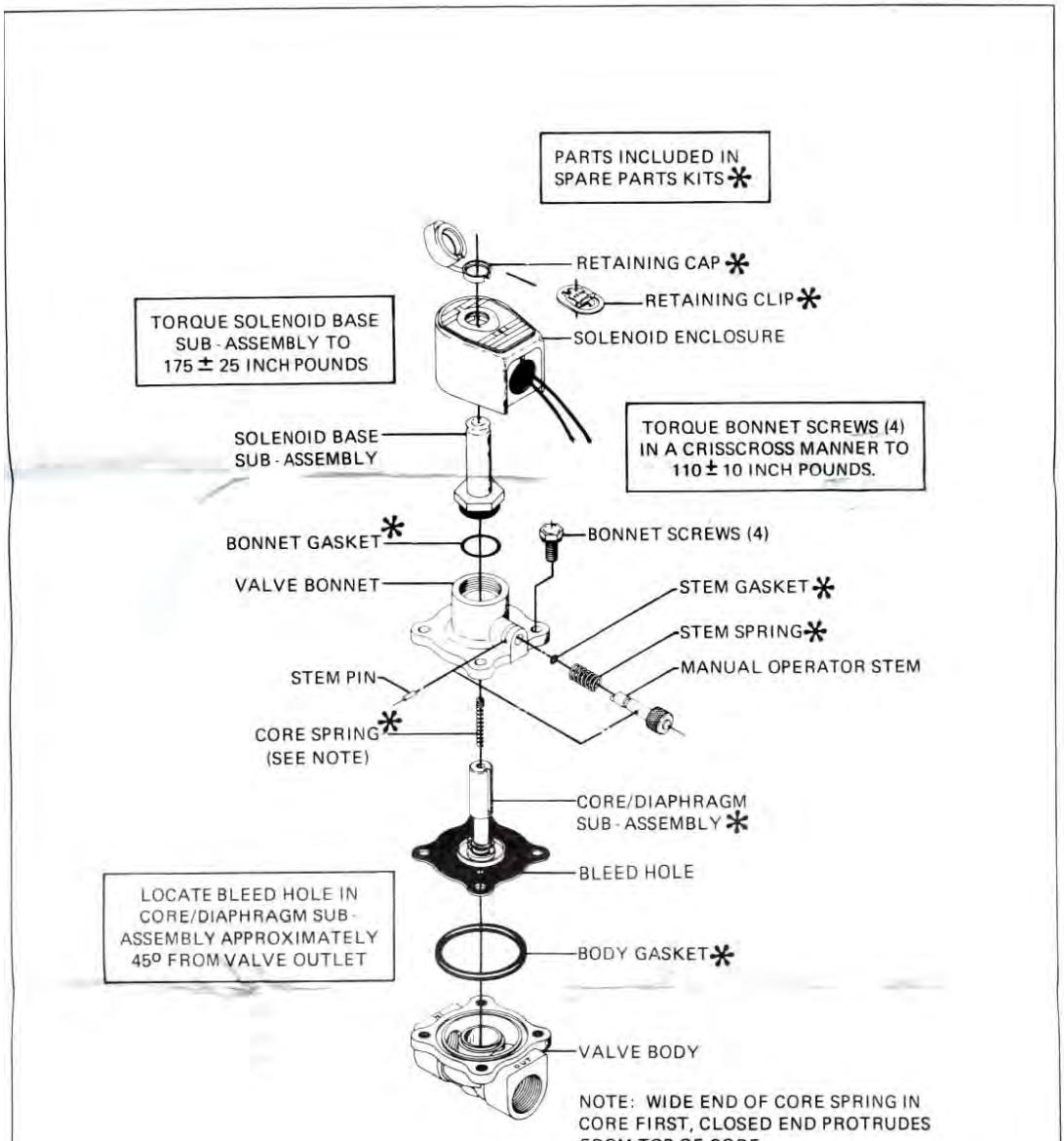

Bulletin 8210 — Manual Operator
General purpose solenoid enclosure shown.
For explosion-proof / watertight solenoid enclosure used on Bulletin 8211, see Form No. V-5380.

Figure 3.

ASCO Valves
Automatic Switch Co. FLORHAM PARK, NEW JERSEY 07932 Form No. V-5825 1975

© Automatic Switch Co. 1975. ALL RIGHTS RESERVED.

Installation & Maintenance Instructions

2–WAY INTERNAL PILOTED–OPERATED SOLENOID VALVES
BRASS AND STAINLESS STEEL CONSTRUCTION
NORMALLY CLOSED OPERATION — 1″, 1 1/4″, & 1 1/2″ NPT

SERIES
8210
8211

Form No.V5455R4

NOTICE: See separate solenoid installation and maintenance instructions for information on: Wiring, Solenoid Temperature, Cause of Improper Operation, Coil or Solenoid Replacement.

DESCRIPTION

Series 8210 valves are 2–way normally closed internal pilot–operated solenoid valves designed for general service. Valves are made of rugged forged brass or stainless steel. Series 8210 valves are provided with a general purpose solenoid enclosure.
Series EF8210 and 8211 are the same as Series 8210 except they are provided with an explosionproof or explosionproof/watertight solenoid enclosure.

OPERATION

Normally Closed: Valve is closed when solenoid is de–energized; open when energized.

NOTE: No minimum operating pressure differential required.

Manual Operator (optional feature)

Manual operator allows manual operation when desired or during an electrical power outage. To engage manual operator (open the valve), remove operator cap and gasket base of valve. Turn manual operator stem clockwise as far as possible. Do not force operator stem. Valve will then be in the same position as when the solenoid is energized. To disengage manual operator, turn stem counterclockwise as far as possible.

⚠ CAUTION: Stem must be fully retracted counterclockwise before operating valve electrically.

Replace manual operator cap gasket and cap.

INSTALLATION

Check nameplate for correct catalog number, pressure, voltage, frequency, and service. Never apply incompatible fluids or exceed pressure rating of the valve. Installation and valve maintenance to be performed by qualified personnel.

Future Service Considerations

Provision should be made for performing seat leakage, external leakage, and operational tests on the valve with a nonhazardous, noncombustible fluid after disassembly and reassembly.

Temperature Limitations

For maximum valve ambient and fluid temperatures, refer to chart below. Check catalog number prefix and watt rating on nameplate.

Watt Rating AC/DC	Catalog Number Prefix	Coil Class	Maximum Ambient Temp.	Maximum Fluid Temp.
15.1 & 16.1 AC	None, KF, SF or SC	F	125°F (51.7°C)	180°F (82°C)
	HT, KH, ST or SU	H	140°F (60°C)	180°F (82°C)
30.6 DC	HT	H	104°F (40°C)	77°F (25°C)

Positioning

AC Construction (Alternating Current): Valve is designed to perform properly when mounted in any position. However, for optimum life and performance, the solenoid should be mounted vertical and upright so as to reduce the possibility of foreign matter accumulating in the solenoid base sub–assembly area.

DC Construction (Direct Current): Valve must be mounted with solenoid vertical and upright.

Piping

Connect piping to valve according to markings on valve body. Apply pipe compound sparingly to male pipe threads only. If applied to valve threads, the compound may enter the valve and cause operational difficulty. Avoid pipe strain by properly supporting and aligning piping. When tightening the pipe, do not use valve or solenoid as a lever. Locate wrenches applied to valve body or piping as close as possible to connection point.

⚠ CAUTION: To protect the solenoid valve, install a strainer or filter suitable for the service involved in the inlet side as close to the valve as possible. Clean periodically depending on service conditions. See ASCO Series 8600, 8601 and 8602 for strainers.

MAINTENANCE

⚠ WARNING: To prevent the possibility of personal injury or property damage, turn off electrical power, depressurize valve, and vent fluid to a safe area before servicing the valve.

NOTE: It is not necessary to remove the valve from the pipeline for repairs.

Cleaning

All solenoid valves should be cleaned periodically. The time between cleanings will vary depending on the medium and service conditions. In general, if the voltage to the coil is correct, sluggish valve operation, excessive noise or leakage will indicate that cleaning is required. In the extreme case, faulty valve operation will occur and the valve may fail to open or close. Clean strainer or filter when cleaning the valve.

Preventive Maintenance

- Keep the medium flowing through the valve as free from dirt and foreign material as possible.
- While in service, the valve should be operated at least once a month to insure proper opening and closing.
- Depending on the medium and service conditions, periodic inspection of internal valve parts for damage or excessive wear is recommended. Thoroughly clean all parts. If parts are worn or damaged, install a complete ASCO Rebuild Kit.

Causes of Improper Operation

- **Incorrect Pressure:** Check valve pressure. Pressure to valve must be within range specified on nameplate.
- **Excessive Leakage:** Disassemble valve and clean all parts. If parts are worn or damaged, install a complete ASCO Rebuild Kit.

© Automatic Switch Co. MCMXCVIII All Rights Reserved.
Printed in U.S.A.

ASCO Valves
Automatic Switch Co. 50–60 Hanover Road, Florham Park, New Jersey 07932

Valve Disassembly

1. Disassemble valve in an orderly fashion using exploded views for identification and placement of parts. Refer to Figure 2 for AC construction; Figure 3 for DC construction.
2. Remove solenoid enclosure. See separate instructions.
3. Unscrew solenoid base sub–assembly. For DC construction, a special wrench is supplied in ASCO Rebuild Kit. For wrench only, Order ASCO Wrench Kit No. K168146–001.
4. Remove bonnet screws, valve bonnet,bonnet gasket, spring retainer (AC construction only) core spring, core/diaphragm sub–assembly and body gasket.
5. For valves equipped with a manual operator, remove cap, cap gasket, bonnet and bonnet gasket. Remove stem assembly with stem gasket from bonnet.
6. All parts are now accessible for cleaning or replacement. If parts are worn or damaged, install a complete ASCO Rebuild Kit.

Valve Reassembly

1. **Lubricate all gaskets** and **the disc at the base of the core** /diaphragm sub–assembly with DOW CORNING 111® Compound lubricant or an equivalent high–grade silicone grease.
2. Replace body gasket and core/diaphragm sub–assembly. Locate bleed hole in core/diaphragm sub–assembly directly over valve outlet. For 1 1/2" NPT construction, locate bleed hole in core/diaphragm sub–assembly approximately 30° from valve outlet.
3. Replace core spring and spring retainer (AC construction only). Install small end of core spring in core first, wide end protruding from top of core. For DC construction, install core spring, small end down toward valve body.
4. Replace valve bonnet and bonnet screws. Hand tighten bonnet screws as far as possible.

IMPORTANT: Press firmly down on core/diaphragm sub–assembly to seat diaphragm assembly against valve seat. While holding this position, torque bonnet screws in a crisscross manner to 144 ± 15 in–lbs [16,3 ± 1,7 Nm].

5. Replace bonnet gasket and solenoid base sub–assembly. Torque solenoid base sub–assembly to 175 ± 25 in–lbs [19,8 ± 2,8 Nm]. For DC construction, the solenoid base sub–assembly must be placed inside the housing before assembling into the valve body. Before doing this, read separate lubrication instructions in *Solenoid Installation & Maintenance Instructions*.
6. For valves provided with a manual operator, replace stem assembly and bonnet (with gaskets). Torque bonnet to 75 ± 10 in–lbs [8,5 ± 1,1 Nm]. Replace cap gasket and cap.
7. Install solenoid. See separate instructions.

⚠ WARNING: To prevent the possibility of personal injury or property damage, check valve for proper operation before returning to service. Also perform internal seat and external leakage tests with a nonhazardous, noncombustible fluid.

8. Restore line pressure and electrical power supply to valve.
9. After maintenance is completed, operate the valve a few times to be sure of proper operation. A metallic *click* signifies the solenoid is operating.

ORDERING INFORMATION

FOR ASCO REBUILD KITS

Parts marked with an asterisk (*) in the exploded view are supplied in Rebuild Kits. When Ordering Rebuild Kits for ASCO valves, order the Rebuild Kit number stamped on the valve nameplate. If the number of the kit is not visible, order by indicating the number of kits required, and the Catalog Number and Serial Number of the valve(s) for which they are intended.

Torque Chart

Part Name	Torque Value Inch–Pounds	Torque Value Newton–Meters
Manual operator bonnet	75 ± 10	8,5 ± 1,1

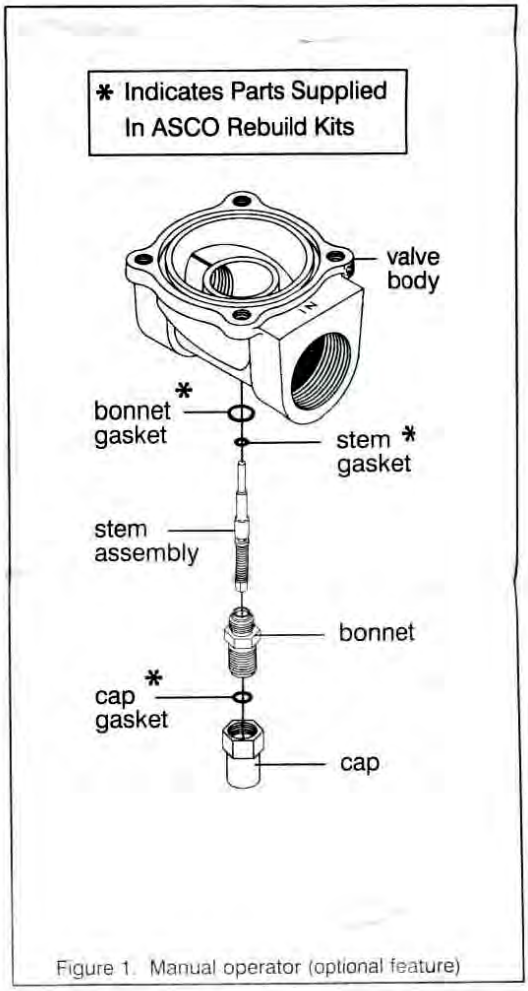

Figure 1. Manual operator (optional feature)

Torque Chart

Part Name	Torque Value Inch–Pounds	Torque Value Newton–Meters
Solenoid base sub–assembly	175 ± 25	19,8 ± 2,8
Bonnet screw	144 ± 15	16,3 ± 1,7

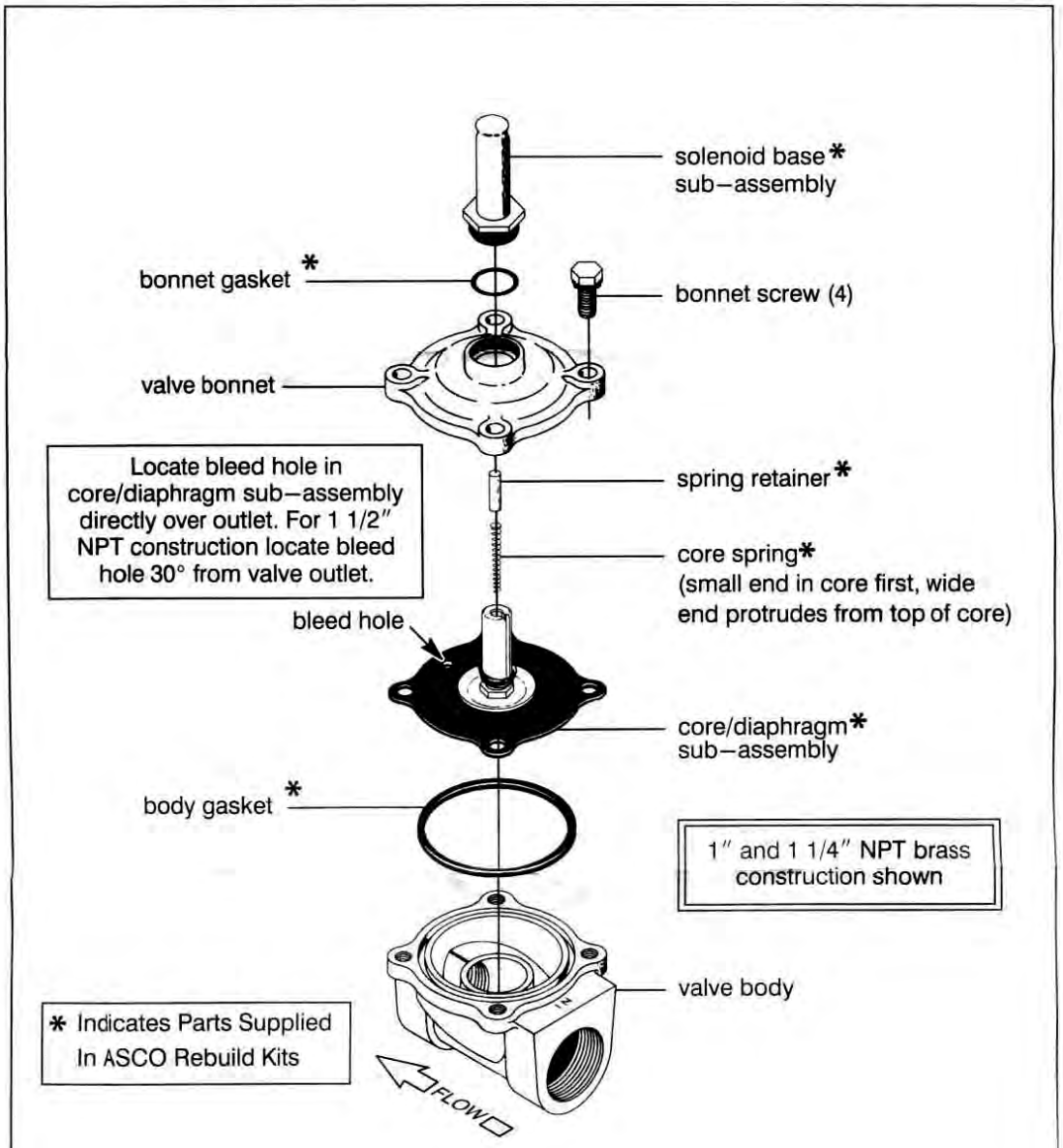

Figure 2. Series 8210 valve without solenoid (AC construction shown).

Form No V5455R4 Page 3 of 4

Torque Chart

Part Name	Torque Value Inch–Pounds	Torque Value Newton–Meters
Solenoid base sub–assembly	175 ± 25	19,8 ± 2,8
Bonnet screw	144 ± 15	16,3 ± 1,7

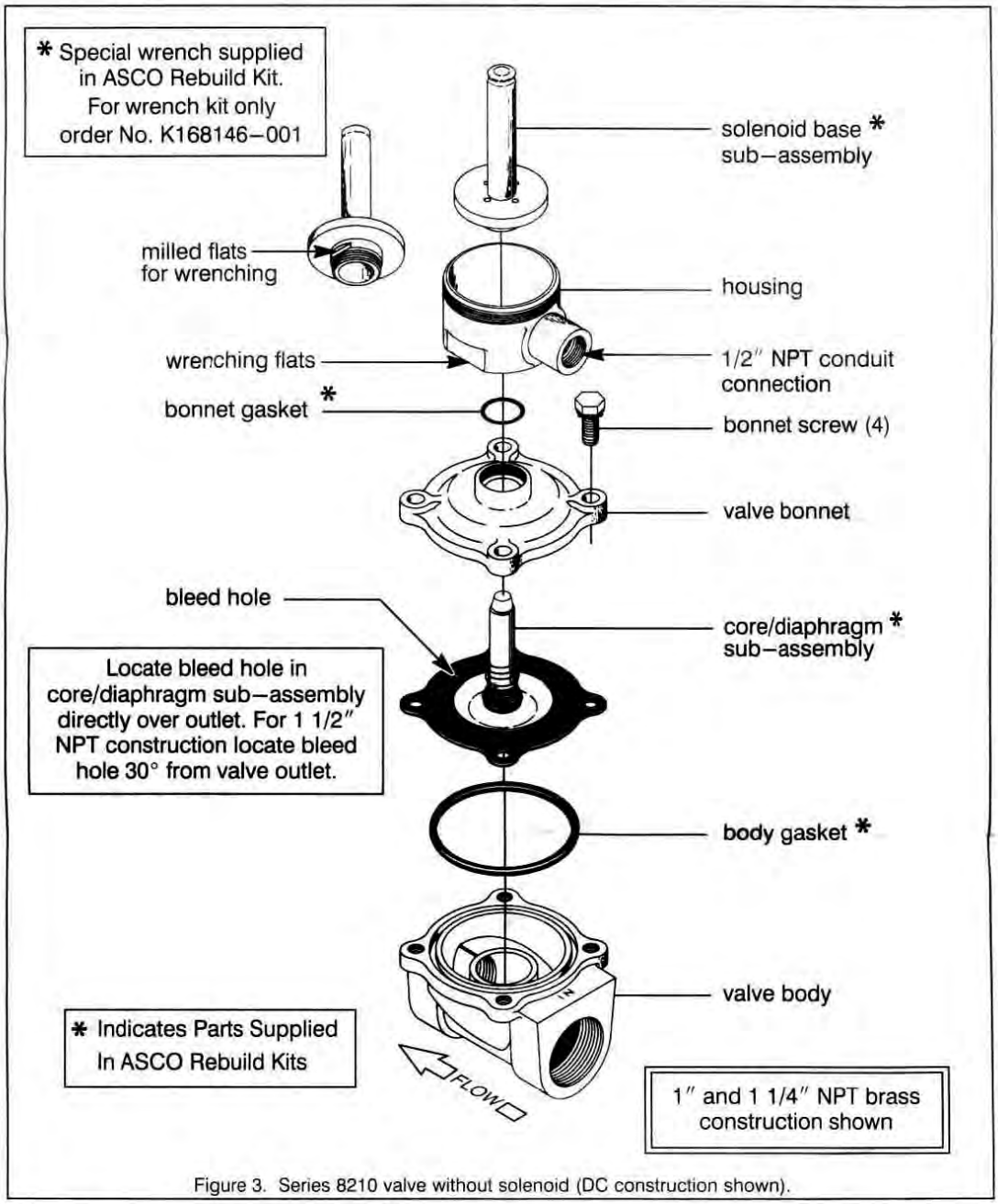

Figure 3. Series 8210 valve without solenoid (DC construction shown).

Page 4 of 4 Form No.V5455R4

ASCO Valves Automatic Switch Co. 50–60 Hanover Road, Florham Park, New Jersey 07932

Installation & Maintenance Instructions

ASCO Red-Hat II®

OPEN–FRAME, GENERAL PURPOSE, WATERTIGHT/EXPLOSIONPROOF SOLENOIDS

SERIES
8017G
8014G
Form No.V7221R1

NOTICE: See separate valve installation and maintenance instructions for information on: Operation, Positioning, Mounting, Cleaning, Preventive Maintenance, Causes of Improper Operation, Disassembly and Reassembly of basic valve.

DESCRIPTION

Series 8017G and 8014G are epoxy encapsulated solenoids. The green solenoid with lead wires and 1/2" conduit connection is designed to meet Enclosure Type 1–General Purpose, Type 2–Dripproof, Types 3 and 3S–Raintight, and Types 4 and 4X–Watertight. The black solenoid on catalog numbers prefixed "EF" is designed to meet Enclosure Types 3 and 3S–Raintight, Types 4 and 4X–Watertight, Types 6 and 6P–Submersible, Type 7 (A, B, C & D) Explosionproof Class I, Division 1 Groups A, B, C, & D and Type 9 (F & F)–Dust–Ignitionproof Class II, Division 1 Groups E & F. See ***Temperature Limitations*** section for solenoid identification and nameplate/retainer for service. When Series 8017G is installed just as a solenoid and not attached to an ASCO valve, the core has a 0.250–28 UNF–2B tapped hole, 0.38 minimum full thread.

Catalog Nos. 8017G1 and 8017G2 are pull type direct–acting solenoids, while Catalog Nos. 8014G1 and 8014G2 are push type reverse–acting solenoids.

General purpose solenoids (green) are available in open–frame construction. This construction may be supplied with 1/4" spade, screw or DIN terminals (Refer to Figure 2).

Optional Features For Type 1 – General Purpose Construction Only

- **Junction Box:** This junction box construction meets Enclosure Types 2,3,3S,4, and 4X. Only solenoids with 1/4" spade or screw terminals may have a junction box. The junction box provides a 1/2" conduit connection, grounding and spade or screw terminal connections within the junction box (See Figure 3).
- **DIN Plug Connector Kit No.K236034:** Use this kit only for solenoids with DIN terminals. The DIN plug connector kit provides a two pole with grounding contact DIN Type 43650 construction (See Figure 4).

OPERATION

Series 8017G – When the solenoid is energized, the core is drawn into the solenoid base sub–assembly. **IMPORTANT: When the solenoid is de–energized, the initial return force for the core, whether developed by spring, pressure, or weight, must exert a minimum force to overcome residual magnetism created by the solenoid. Minimum return force is 1 pound, 12 ounces.**

Series 8014G – When the solenoid is energized, the disc holder assembly seats against the orifice. **IMPORTANT: Initial return force for the disc or disc holder assembly, whether developed by spring, pressure, or weight, must exert a minimum force to overcome residual magnetism created by the solenoid. Minimum return force is 1 pound, 12 ounces. When the solenoid is de–energized , the disc holder assembly returns.**

INSTALLATION

Check nameplate for correct catalog number, service, and wattage. Check front of solenoid for voltage and frequency.

⚠ WARNING: Electrical hazard from the accessibility of live parts. To prevent the possibility of death, serious injury or property damage, install the open–frame solenoid in an enclosure.

For Black Enclosure Types 7 and 9 Only

⚠ CAUTION: To prevent fire or explosion, do not install solenoid and/or valve where ignition temperature of hazardous atmosphere is less than 180° C.

NOTE: These solenoids have an internal non–resetable thermal fuse to limit solenoid temperature in the event that extraordinary conditions occur which could cause excessive temperatures. These conditions include high input voltage, a jammed core, excessive ambient temperature or a shorted solenoid, etc. This unique feature is a standard feature only in solenoids with black explosionproof/dust–ignitionproof enclosures (Types 7 & 9).

⚠ CAUTION: To protect the solenoid valve or operator, install a strainer or filter, suitable for the service involved in the inlet side as close to the valve or operator as possible. Clean periodically depending on service conditions. See ASCO Series 8600, 8601, and 8602 for strainers.

Temperature Limitations

For maximum valve ambient temperatures, refer to chart. The temperature limitations listed, only indicate maximum application temperatures for field wiring rated at 90°C. Check catalog number prefix and watt rating on nameplate to determine maximum ambient temperature. See valve installation and maintenance instructions for maximum fluid temperature. NOTE: For steam service, refer to ***Wiring*** section, ***Junction Box*** for temperature rating of supply wires.

Temperature Limitations For Series 8017G or 8014G Solenoids for use on Valves Rated at 16.1 or 20.1 Watts

Watt Rating	Catalog Number Coil Prefix	Class of Insulation	Maximum ÷ Ambient Temp.
16.1	None, KF, KP SD, SF, & SP	F	125°F (54°C)
20.1	FB, KF, KP, SD, SF, & SP	F	104°F (40°C)
16.1	None, KB, KH, SS, ST & SU	H	140°F (60°C)
20.1	HB, KH, SS, ST, SU & SV	H	140°F (60°C)

÷ Minimum ambient temperature –40° F (–40° C).

Positioning

This solenoid is designed to perform properly when mounted in any position. However, for optimum life and performance, the solenoid should be mounted vertically and upright to reduce the possibility of foreign matter accumulating in the solenoid base sub–assembly area.

Wiring

Wiring must comply with local codes and the National Electrical Code. All solenoids supplied with lead wires are provided with a grounding wire which is green or green with yellow stripes and a 1/2" conduit connection. To facilitate wiring, the solenoid may be rotated 360°. For the watertight and explosionproof solenoid, electrical fittings must be approved for use in the approved hazardous locations.

⚠ CAUTION: Cryogenic Applications – Solenoid lead wire insulation should not be subjected to cryogenic temperatures. Adequate lead wire protection and routing must be provided.

Automatic Switch Co. MCMXCIX All Rights Reserved

Printed in U.S.A.

ASCO Valves Automatic Switch Co. 50–60 Hanover Road Florham Park, New Jersey 07932

Additional Wiring Instructions For Optional Features:

- **Open–Frame solenoid with 1/4" spade terminals.**

For solenoids supplied with screw terminal connections use #12–18 AWG stranded copper wire rated at 90°C or greater. Torque terminal block screws to 10 ± 2 in–lbs [1,0 ± 1,2 Nm]. A tapped hole is provided in the solenoid for grounding, use a #10–32 machine screw. Torque grounding screw to 15 – 20 in–lbs [1,7 – 2,3 Nm]. On solenoids with screw terminals, the socket head screw holding the terminal block to the solenoid is the grounding screw. Torque the screw to 15 – 20 in–lbs [1,7 – 2,3 Nm] with a 5/32" hex key wrench.

- **Junction Box**

The junction box is used with spade or screw terminal solenoids only and is provided with a grounding screw and a 1/2" conduit connection. Connect #12–18 AWG standard copper wire only to the screw terminals. Within the junction box use field wire that is rated 90°C or greater for connections. For steam service use 105°C rated wire up to 50 psi or use 125°C rated wire above 50 psi. After electrical hookup, replace cover gasket, cover, and screws. Tighten screws evenly in a crisscross manner.

- **DIN Plug Connector Kit No.K236034**

1. The open–frame solenoid is provided with DIN terminals to accommodate the plug connector kit.
2. Remove center screw from plug connector. Using a small screwdriver, pry terminal block from connector cover.
3. Use #12–18 AWG stranded copper wire rated at 90°C or greater for connections. Strip wire leads back approximately 1/4" for installation in socket terminals. The use of wire–end sleeves is also recommended for these socket terminals. Maximum length of wire–end sleeves to be approximately 1/4". Tinning of the ends of the lead wires is not recommended.
4. Thread wire through gland nut, gland gasket, washer and connector cover.

NOTE: Connector housing may be rotated in 90° increments from position shown for alternate positioning of cable entry.

5. Check DIN connector terminal block for electrical markings. Then make electrical hookup to terminal block according to markings on it. Snap terminal block into connector cover and install center screw.
6. Position connector gasket on solenoid and install plug connector. Torque center screw to 5 ± 1 in–lbs [0,6 ± 1,1 Nm].

Installation of Solenoid

Solenoids may be assembled as a complete unit. Tightening is accomplished by means of a hex flange at the base of the solenoid.

Solenoid Temperature

Standard solenoids are designed for continuous duty service. When the solenoid is energized for a long period, the solenoid becomes hot and can be touched by hand only for an instant. This is a safe operating temperature.

MAINTENANCE

⚠ WARNING: To prevent the possibility of death, serious injury or property damage, turn off electrical power, depressurize solenoid operator and/or valve, and vent fluid to a safe area before servicing.

Cleaning

All solenoid operators and valves should be cleaned periodically. The time between cleaning will vary depending on medium and service conditions. In general, if the voltage to the solenoid is correct, sluggish valve operation, excessive noise or leakage will indicate that cleaning is required. Clean strainer or filter when cleaning the valve.

Preventive Maintenance

- Keep the medium flowing through the solenoid operator or valve as free from dirt and foreign material as possible.
- While in service, the solenoid operator or valve should be operated at least once a month to insure proper opening and closing.
- Depending on the medium and service conditions, periodic inspection of internal valve parts for damage or excessive wear is recommended. Thoroughly clean all parts. Replace any worn or damaged parts.

Causes of Improper Operation

- **Faulty Control Circuit:** Check the electrical system by energizing the solenoid. A metallic *click* signifies that the solenoid is operating. Absence of the *click* indicates loss of power supply. Check for loose or blown fuses, open–circuited or grounded solenoid, broken lead wires or splice connections.
- **Burned–Out Solenoid:** Check for open–circuited solenoid. Replace if necessary. Check supply voltage; it must be the same as specified on nameplate/retainer and marked on the solenoid. Check ambient temperature and check that the core is not jammed.
- **Low Voltage:** Check voltage across the solenoid leads. Voltage must be at least 85% of rated voltage.

Solenoid Replacement (Refer to Figure 1)

1. Disconnect conduit, coil leads, and grounding wire.

NOTE: Any optional parts attached to the old solenoid must be reinstalled on the new solenoid. For removal or assembly of optional parts, see Figure 2, 3 or 4.

2. Snap off red cap from top of solenoid base sub–assembly.
3. Push down on solenoid. Then using a suitable screwdriver, insert blade between solenoid spacer and nameplate/retainer. Pry up slightly and push to remove.
4. Remove solenoid spacer and solenoid from solenoid base sub–assembly.
5. Reassemble in reverse order of disassembly. Use exploded views for identification and placement of parts.

Disassembly and Reassembly of Solenoids

1. Remove solenoid, see ***Solenoid Replacement***.
2. Remove spring washer from solenoid base sub–assembly.
3. Unscrew solenoid base sub–assembly from valve body. For Series 8014G solenoids a special wrench adapter for the solenoid base sub–assembly is supplied in the ASCO Rebuild Kit. For wrench adapter only, order Wrench Kit No. K218950.
4. Remove internal solenoid parts for cleaning or replacement. Use exploded views for identification and placement of parts.
5. If the solenoid is part of a valve, refer to basic valve installation and maintenance instructions for further disassembly.
6. Reassemble in reverse order of disassembly. Use exploded views for identification and placement of parts.
7. Torque solenoid base sub–assembly and adapter to 175±25 in–lbs [19,8±2,8 Nm].

ORDERING INFORMATION FOR ASCO SOLENOIDS

When Ordering Solenoids for ASCO Solenoid Operators or Valves, order the number stamped on the solenoid. Also specify voltage and frequency.

Torque Chart

Part Name	Torque Value In–lbs	Torque Value Nm
Solenoid base sub–assembly & adapter	175 ± 25	19,8 ± 2,8

Form No.V7221R1

ASCO Valves Automatic Switch Co. 50–60 Hanover Road, Florham Park, New Jersey 07932

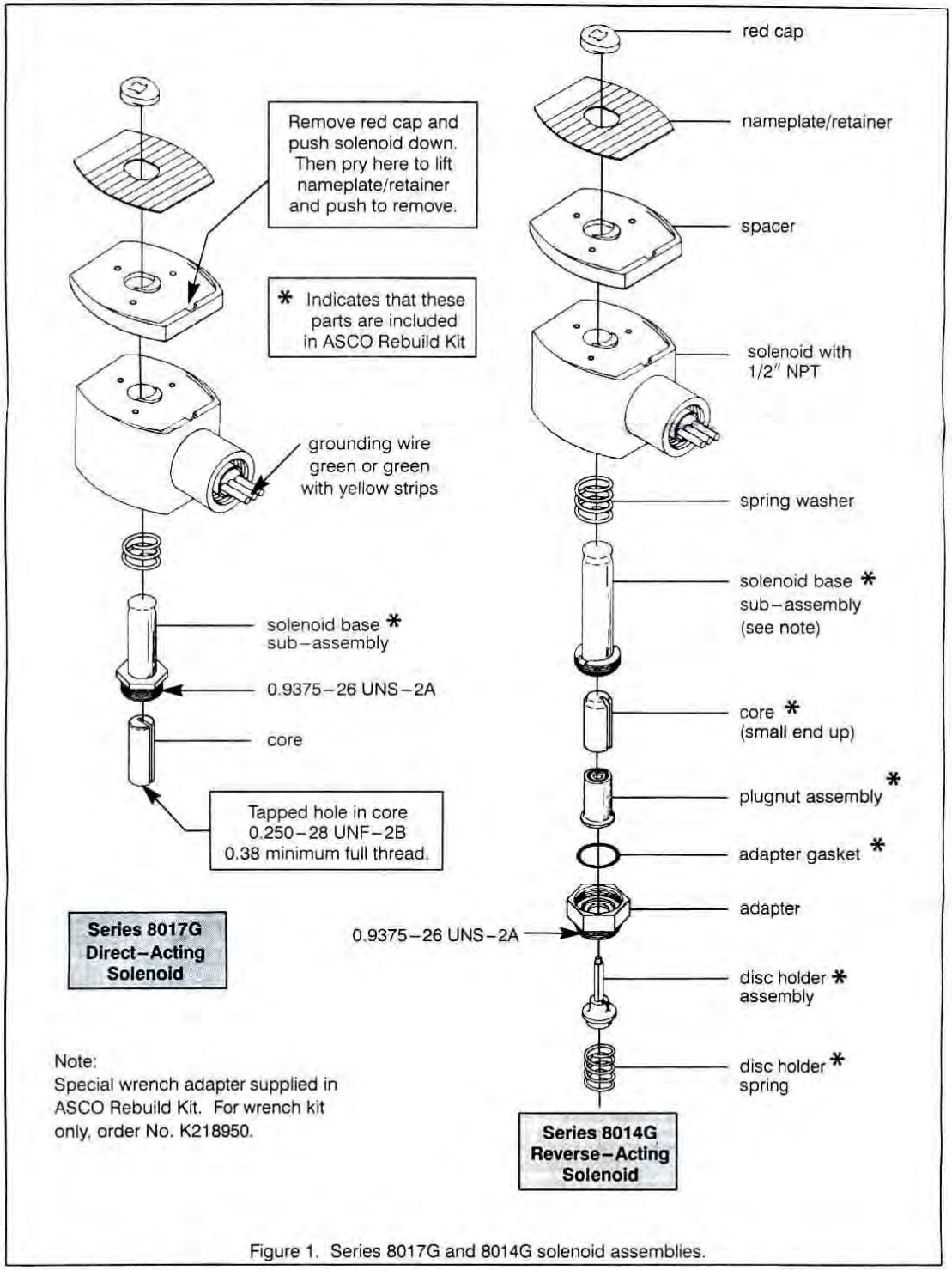

Figure 1. Series 8017G and 8014G solenoid assemblies.

Form No.V7221R1 Page 3 of 4

ASCO Valves Automatic Switch Co. 50-60 Hanover Road, Florham Park, New Jersey 07932

Torque Chart

Part Name	Torque Value in Inch–Pounds	Torque Value in Newton–Meters
terminal block screws	10 ± 2	1,1 ± 0,2
socket head screw	15 – 20	1,7 – 2,3
center screw	5 ± 1	0,6 ± 0,1

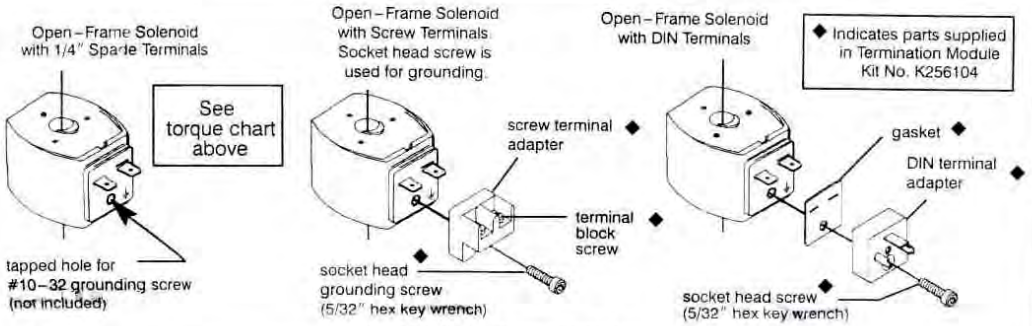

Figure 2. Open–frame solenoids

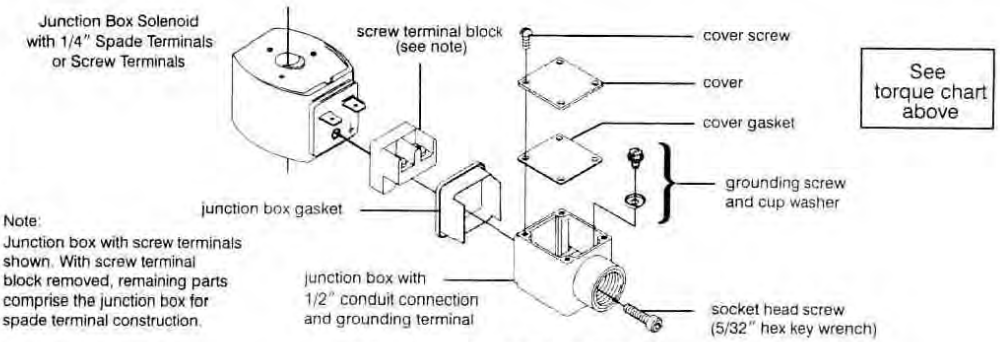

Figure 3. Junction box (optional feature)

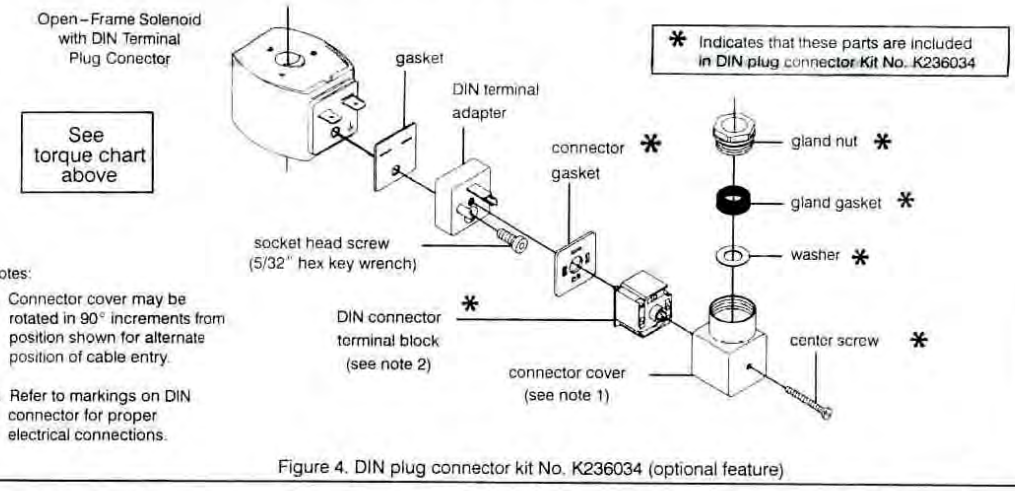

Figure 4. DIN plug connector kit No. K236034 (optional feature)

Page 4 of 4

Form No.V7221R1

ASCO Valves Automatic Switch Co. 50–60 Hanover Road, Florham Park, New Jersey 07932

Installation & Maintenance Instructions

2–WAY AUXILIARY–OPERATED PILOT–CONTROLLED PISTON VALVES
NORMALLY CLOSED OR NORMALLY OPEN OPERATION
1/2, 3/4, 1, 1 1/4, 1 1/2, 2 OR 2 1/2 NPT
BRONZE OR STAINLESS STEEL CONSTRUCTION

SERIES 8290

Form No.V6941R2

NOTICE: See separate Installation and Maintenance Instructions for information on *Solenoid Pilot Valve* used in conjunction with Series 8290 valves.

DESCRIPTION

Series 8290 valves are 2–way auxiliary–operated, pilot– controlled piston valves designed for air, water, light oil or steam service. Valves are normally closed or normally open construction as required. Valve bodies are made of bronze or Type 316L stainless steel; elastomers are made of PTFE. Series 8290 valves are supplied with a piston type operator having a diameter of 50, 63, 90 or 125 mm depending upon customer requirements. Valves have an integral position indicator, providing visual indication of ***Open*** and ***Closed*** positions; with the exception of the 50 operator.

OPERATION

Refer to operating instructions (to follow) and the graphs ***Auxiliary Pilot Pressure vs Main Line Pressure***. Use these graphs to determine the minimum auxiliary pressure (filtered air or water) required for a given main line pressure.

Normally Closed Operation: With auxiliary pressure removed valve is closed. With auxiliary pressure applied valve is open.

Normally Open Operation: With auxiliary pressure removed valve is open. With auxiliary pressure applied valve is closed.

IMPORTANT: Pressure is at Port 2 (entry under disc) for all liquids and gases. For rapid cycling steam valves pressure is at Port 1 (entry above disc).

NOTICE: See corresponding product leaflets (on valves and pilot valves) for minimum and maximum pilot pressure, operating pressure differential and fluid temperature.

Normally Open Valves (entry under disc)

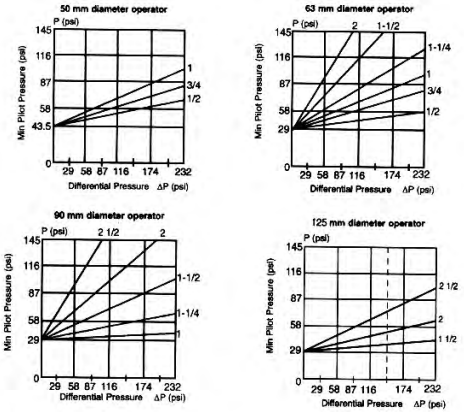

Normally closed – (entry under disc) Minimum pilot pressure is 58 psi; maximum 145 psi.

Normally Closed Valves – Steam Service (entry above disc)

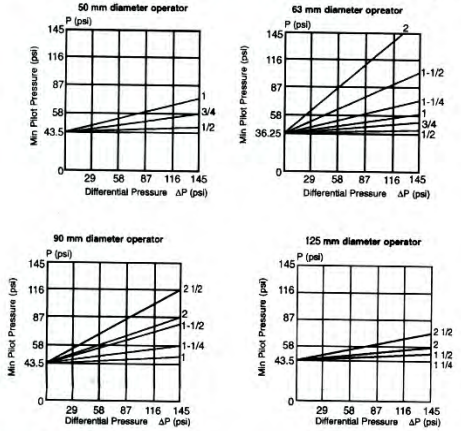

INSTALLATION

Check nameplate for correct catalog number, pressure (main and auxiliary), temperature and service. Never apply incompatible fluids or exceed pressure rating of the valve. Installation and valve maintenance to be performed by qualified personnel.

Future Service Considerations

Provision should be made for performing seat leakage, external leakage and operational tests on the valve with a nonhazardous, noncombustible fluid after disassembly and reassembly.

Temperature Limitations – Main Valve

- Ambient Temperature Range:
  12°F (–10°C) to 140°F (60°C)
- Fluid Temperature Range:
  12°F (–10°C) to 356°F (180°C)

Positioning

This valve is designed to perform properly when mounted in any position.

Pilot Valve Installation (General)

For ease of access to solenoid pilot valve and auxiliary piping alignment, the piston operator with the pilot port connection may be rotated 360°.

Remove the plastic protective plug from the pilot port. See separate instructions and drawings covering normally closed and normally open operation. Then follow the connection procedures for the appropriate version:

Connection of the pilot valve

- to the 1/8" NPT port (for 50 or 63 mm operator), see separate instructions for pilot valves.
- to the 1/4" NPT port (for 90 or 125 mm operator), see separate instructions for pilot valves.

⚠ CAUTION: The exhaust port plug mounted by the manufacturer must never be removed.

Connect piping to valve according to markings on valve body. Pressure is at Port 2 (entry under disc) for all liquids and gases. For rapid cycling steam valves pressure is at Port 1 (entry above disc). Apply pipe compound sparingly to male pipe threads only. If applied to valve threads, the compound may enter the valve and cause operational difficulty. Avoid pipe strain by properly supporting and aligning piping. When tightening the pipe, do not use valve or piston operator head as a lever. Locate wrenches applied to valve body or piping as close as possible to connection point.

⚠ CAUTION: To protect the piston operated valve, install a strainer or filter suitable for the service involved (where practical) in the inlet side as close to the valve as possible. Clean periodically depending on service conditions. See ASCO Series 8600, 8601 and 8602 for strainers.

MAINTENANCE

⚠ WARNING: To prevent the possibility of death, serious injury or property damage, turn off electrical power, depressurize valve (main and auxiliary), and vent fluid to a safe area before servicing the valve.

NOTE: It is not necessary to remove the main valve from the pipeline for repairs. However, the piping or tubing and electrical connections must be disconnected from the solenoid pilot valve. See separate instructions.

Cleaning

All valves should be cleaned periodically. The time between cleanings will vary depending on the medium and service conditions. In general, sluggish valve operation, excessive noise or leakage will indicate that cleaning is required. In the extreme case, faulty valve operation will occur and the valve may fail to open or close. Clean strainer or filter when cleaning the valve.

Preventive Maintenance

- Keep the medium flowing through the valve as free from dirt and foreign material as possible.
- While in service, the valve should be operated at least once a month to insure proper opening and closing.
- Depending on the medium and service conditions, periodic inspection of internal valve parts for damage or excessive wear is recommended. Thoroughly clean all parts. If parts are worn or damaged, install a complete ASCO Rebuild Kit.

Causes of Improper Operation

- **Incorrect Pressure:** Check valve pressure. Pressure to valve must be within range specified on nameplate.
- **Excessive Leakage:** Disassemble valve and clean all parts. If parts are worn or damaged, install a complete ASCO Rebuild Kit.

Valve Disassembly and Reassembly

1. Disassemble valve in an orderly fashion using exploded view for identification and placement of parts.
2. Disconnect piping and wiring from solenoid pilot valve. See separate instructions.
3. Remove the piston operator and stuffing box packing with a wrench (a).
4. Unscrew the disc nut with a wrench (b).
5. Clean all accessible parts.
6. Replace parts numbers 1, 2, 3 and 4 with the corresponding parts from the ASCO Rebuild Kit.
7. Reassemble the parts and observe the indicated tightening torques.
8. Reinstall piping and make electrical connection to solenoid pilot valve. See separate instructions.

⚠ WARNING: To prevent the possibility of death, serious injury or property damage, check valve for proper operation before returning to service. Also perform internal seat and external leakage tests with a nonhazardous, noncombustible fluid.

9. Restore pressure (main and auxiliary) and electrical power supply to solenoid pilot valve.
10. After maintenance is completed, operate the valve a few times to be sure of proper operation.

ORDERING INFORMATION FOR ASCO REBUILD KITS

When Ordering Rebuild Kits for ASCO valves, order the Rebuild Kit number stamped on the valve nameplate. If the number of the kit is not visible, order by indicating the number of kits required, and the Catalog Number and Serial Number of the valve(s) for which they are intended.

Normally Closed Pilot (entry under disc)

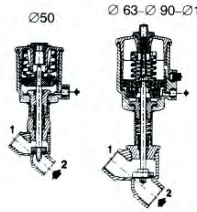

Normally Open Pilot (entry under disc)

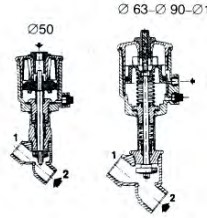

Normally Closed Pilot (entry above disc)

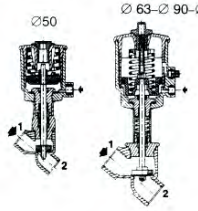

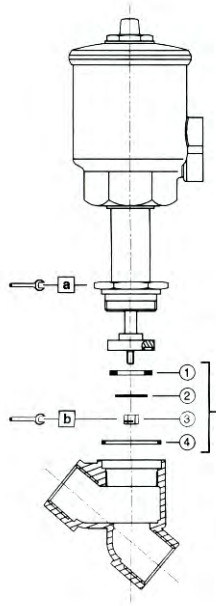

• Valves: bronze, st.st, AISI 316L	TORQUES								
	Ø	(mm)	N.m		in.Lb		(mm)	
			a	b	a	b	a	b
	1/2	15	100	5	880	44	30*	8
	3/4	20	100	5	880	44	30*	8
	1	25	120	5	1060	44	30*	10
	1" 1/4	32	120	5	1060	44	36	10
	1" 1/2	40	150	5	1320	44	46	10
	2	50	150	5	1320	44	46	10
	2" 1/2	65	200	5	1770	44	46	10

* Ø 50 bronze : a = 30

• Valves: bronze, st.st, AISI 316L	CATALOGUE NUMBER - CODES		
	Ø	(mm)	• Disc seal (1) + washer (2) + disc nut (3) + seal (4)
	1/2	15	C131204
	3/4	20	C131205
	1	25	C131206
	1" 1/4	32	C131207
	1" 1/2	40	C131208
	2	50	C131209
	2" 1/2	65	C131622

Serie - Series
189 banjo

Messa in servizio - Instalación - Installatie
ELETTROVALVOLA DI COMANDO A MONTAGGIO DIRETTO
corpo filettato G1/8 e raccordo istantaneo tubo Ø 4mm est
ELECTROVALVULA DE MANDO CON IMPLANTACION DIRECTA
cuerpo roscado G1/8 y enchufe rápido para tubo Ø 4mm
DIRECT MONTEERBAAR MAGNEETVENTIEL
G1/8 poortaansluiting, insteekkoppeling Ø 4 mm ext.

3/2

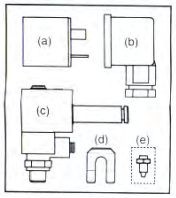

IT

IMBALLAGGIO

In sacchetto di plastica:

a - Bobina
b - Connettore
c - Corpo elettrovalvola
d - Clip
e - Riduttore di scarico non montato (accessorio)

ES

SUMINISTRO

En bolsa de plástico :

a - Bobina
b - Conector
c - Cuerpo de la electroválvula
d - Clip
e - Reductor de escape sin montar (accesorio)

NL

VERPAKKING

In een plastic verpakking :

a - Spoel
b - Steker
c - Magneetventielbehuizing
d - Clip
e - Niet-gemonteerd smoorventiel (accessoire)

APPLICAZIONI
APLICACIONES
APPLICATIONS

MONTAGGIO - MONTAJE - MONTAGE

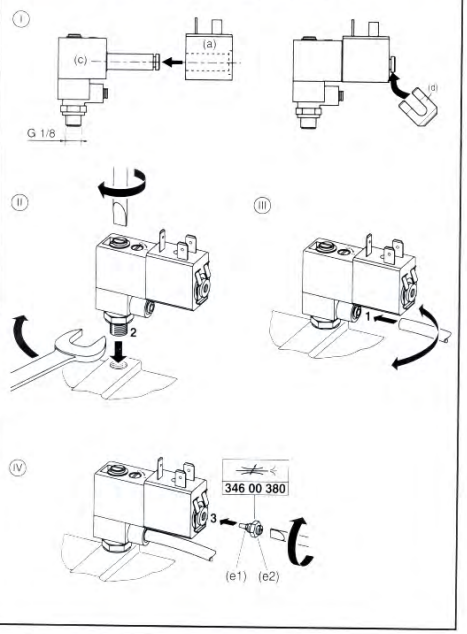

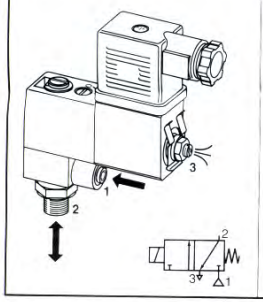

MS-P508

FR

APPLICATIONS

Electrovanne compacte prévue pour implantation directe sur un actionneur (vérins simple effet, vannes, etc . . .). Grande flexibilité d'adaptation grâce aux possibilités d'orientation sur 360° du corps de l'électrovanne, de l'orifice d'alimentation (1), de la bobine et du connecteur.
Utilisation sur air ou gaz neutres

INSTALLATION

I - Montage de la bobine et du clips de verrouillage
II - **Implantation de l'électrovanne** par l'orifice d'utilisation (2) à l'aide d'une clé plate de 14 ou par tournevis.
III - Choix de l'orientation et raccordement de l'arrivée de pression sur orifice (1) par tube souple Ø4mm ext.
IV - Montage du réducteur d'échappement livré avec l'électrovanne ou fourni séparément en accessoire code 346 00 380
- Serrer dans l'orifice 3 (Ø M5) la vis (e1) du réducteur jusqu'en butée, puis dévisser pour augmenter le débit d'échappement **sans jamais dépasser 3 tours** (débit maxi obtenu à partir d'1 tour)
- Bloquer le contre-écrou (e2) avec une clé plate de 8 mm
- Mise sous pression, puis essai
- Affiner le réglage en fonction du débit d'échappement **souhaité**
- **Le réglage du réducteur doit obligatoirement s'effectuer hors pression.**

RACCORDEMENT ELECTRIQUE

Bobine orientable sur 360°.
Le raccordement électrique s'effectue par connecteur débrochable normalisé 3 broches (2 + masse) avec CM8 (Pg 9P).
Connecteur orientable à 180°.
Connecteur avec visualisation et protection électrique intégrées ou avec câble raccordé long. 2m, sur demande, nous consulter.
Electrovanne prévue pour une mise sous tension permanente dans les limites de température ambiante maximale (60°C).
Courant alternatif 50 Hz ou 60 Hz ou courant continu.
Avant mise sous tension, vérifier la concordance de tension entre bobine et reseau d'alimentation.
Bobine proposée en pièces de rechange
Electrovanne équipée d'une commande manuelle auxiliaire à position maintenue à commande par tournevis.

GB

APPLICATIONS

Solenoid valve of compact design for direct installation on an actuator (single-acting cylinder, valve etc.). **Mounting facilitated by 360° rotation capability of valve body, supply port (1), coil and connector.**
For use with neutral gases and air.

INSTALLATION

I - Fit coil and retaining clip.
II - **Install solenoid valve** in load port (2) with a 14mm open end wrench or screwdriver.
III - Orientate valve and connect 4mm O.D. pressure supply hose to port (1).
IV - Fit exhaust reducer supplied with valve or separately (code 346 00 380).
- Screw fitting (e1) into port 3 (M5) of the reducer until it bottoms, then unscrew it **by not more than three turns** to increase the exhaust flow (maximum flow obtained after one turn).
- Tighten locknut (e2) with an 8mm open end wrench.
- Pressurize then test.
- Adjust to obtain the required flow rate.
- **The reducer must only be adjusted when unpressurised.**

ELECTRICAL CONNECTION

Coil rotatable through 360°.
Electrical connection by standard 3-pin spade plug (two power terminals + earth) with CM8 (Pg 9P).
Connector rotatable through 180°.
Connector complete with integral display and protection system, or 2m lead on request (consult us).
Valve designed for continuous duty at upper ambient temperature limit (60°C).
Operates on DC or 50Hz or 60Hz AC.
Before energizing, check that line voltage matches coil voltage rating.
Coil available as a spare part.
Valve features a screwdriver-type locking manual operator.

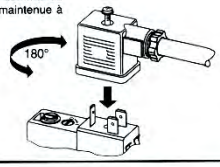

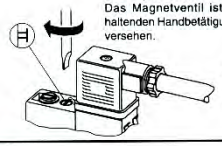

P. max. = 10 bar

DE

ANWENDUNG

Kompaktes Steuerventil zur direkten Montage auf einem pneumatischen Antrieb (einfachwirkender Zylinder, Ventil usw.). Einfache Montage, da das Ventilgehäuse, der Versorgungsanschluß (1), der Magnet und die Gerätesteckdose um 360° drehbar sind.
Zum Einsatz mit Luft oder neutralen Gasen.

MONTAGE

I - Setzen Sie den Magnet ein und befestigen Sie den Clip.
II - Schrauben Sie das Magnetventil mit dem Verbraucheranschluß (2) mit Hilfe eines Gabelschlüssels, Schlüsselweite 14, oder eines Schraubendrehers in das Anschlußgewinde des pneum. Antriebes.
III - Positionieren Sie das Ventil und schließen Sie den Druckanschluß (1) mit einem flexiblen Schlauch, 4 mm Ø außen, an.
IV - Montieren Sie **entweder** die beigefügte Auslaßdrossel **oder** die als Zubehör separat gelieferte Auslaßdrossel (Bestell-Code 346 00 380) in Anschluß (3).
- Drehen Sie die Schraube (e1) der Auslaßdrossel bis zum Anschlag in das Gewinde (3) (Ø M5) ein und lösen Sie sie anschließend wieder mit **nicht mehr als 3 Umdrehungen,** um den Entlüftungsdurchfluß zu erhöhen (der max. Durchfluß wird bereits nach 1 Umdrehung erreicht).
- Befestigen Sie die Sicherungsmutter (e2) mit einem Gabelschlüssel, SW 8 mm.
- Beaufschlagen Sie das Ventil mit Druck und überprüfen Sie die Funktionsweise.
- Führen Sie eine Feineinstellung durch, um den gewünschten Durchfluß zu erhalten.
Die Auslaßdrossel darf nur im drucklosen Zustand eingestellt werden.

ELEKTRISCHER ANSCHLUSS

Um 360° drehbarer Magnet :
Elektrischer Anschluß über 3 polige Gerätesteckdose (2 Leiter + Masse) mit Pg 9P (CM 8).
Um 180° umsetzbare Gerätesteckdose:
Gerätesteckdose mit Leuchtdiode und Schutzbeschaltung oder Kabel 2m lang (auf Anfrage).
Das Ventil ist für Dauerspannung bei der angegebenen maximal zulässigen Umgebungstemperatur ausgelegt (60°C).
Wechselstrom 50/60 Hz oder Gleichstrom.
Überprüfen Sie bitte vor der Inbetriebsetzung, ob die Spulen- und Versorgungsspannung übereinstimmen.
Ersatzspule lieferbar.
Das Magnetventil ist mit einer selbsthaltenden Handbetätigung mit Schlitzachse versehen.

MS-P508

MATERIAL SAFETY DATA SHEET

Print

MAGNALUBE-G PTFE/PETROLEUM GREASE

MANUFACTURER:
SAUNDERS ENTERPRISES, INC.
11-51 44TH ROAD
LONG ISLAND CITY, N.Y. 11101

EMERGENCY HEALTH INFORMATION: (718) 729-1000
EMERGENCY SPILL INFORMATION: (718) 729-2628
OTHER PRODUCT SAFETY INFO: (718) 729-2671

COMPOSITION/INFORMATION ON INGREDIENTS	CAS NUMBER	PERCENTAGE
LUBRICATING BASE OIL SEVERELY REFINED PETROLEUM DISTILLATE ACGIH-TLV-5MG/M CUBED1OMG/M3 (MIST) ACGIH STEL	* SEE BELOW	78%
ORGANIC POLYUREA THICKENER (TSCA PROPRIETY COMPOUND EPA FILE #26847 NON-HAZARDOUS)		22%
PTFE	#9002-84-0	

*THE BASE OIL MAY BE A MIXTURIE OF ANY OF THE FOLLOWING: CAS 64741884, CAS 64741895, CAS 64741964, CAS 64741975, CAS 64742014, CAS 64742525, CAS 64742536, CAS 64742547, CAS 64742627, CAS 64742650, OR CAS 72623837.

COMPOSITION COMMENT

ALL THE COMPONENTS OF THIS MATERIAL ARE ON THE TOXIC SUBSTANCES CONTROL ACT CHEMICAL SUBSTANCES INVENTORY.

THIS PRODUCT FITS THE ACGIH DEFINITION FOR MINERAL OIL MIST. THE ACGIH TLV IS 5 MG/M3, THE OSHA PEL IS 5 MG/M3.

HAZARDS IDENTIFICATION

POTENTIAL HEALTH EFFECTS:

EYE:
NOT EXPECTED TO CAUSE PROLONGED OR SIGNIFICANT EYE IRRITATION.

SKIN:
CONTACT WITH THE SKIN IS NOT EXPECTED TO CAUSE PROLONGED OR SIGNIFICANT IRRITATION. SKIN CONTACT MAY CAUSE DRYING OR DEFATTING OF THE SKIN. NOT EXPECTED TO BE HARMFUL TO INTERNAL ORGANS IF ABSORBED TROUGH THE SKIN.

HIGH-PRESSURE EQUIPMENT INFORMATION:
ACCIDENTAL HIGH-VELOCITY INJECTION UNDER THE SKIN OF MATERIALS OF THIS TYPE MAY RESULT IN SERIOUS INJURY. SEEK MEDICAL ATTENTION AT ONCE SHOULD AN ACCIDENT LIKE THIS OCCUR. THE INITIAL WOUND AT THE INJECTION SITE MAY NOT APPEAR TO BE SERIOUS AT FIRST; BUT, IF LEFT UNTREATED, COULD RESULT IN DISFIGUREMENT OR AMPUTATION OF THE AFFECTED PART.

INGESTION:
IF SWALLOWED, THIS SUBSTANCE IS CONSIDERED PRACTICALLY NON-TOXIC TO INTERNAL ORGANS.

INHALATION:
NOT EXPECTED TO BE HARMFUL IF INHALED. CONTAINS A PETROLEUM-BASED MINERAL PROLONGED OR REPEATED INHALATION OF OIL MIST AT AIRBORNE LEVELS ABOVE THE RECOMMENDED MINERAL OIL MIST EXPOSURE LIMIT.

SIGNS AND SYMPTOMS OF EXPOSURE:
SKIN DEFATTING: MAY INCLUDE DRYING AND REDDENING OF THE SKIN.

FIRST AID MEASURES

EYE:
NO SPECIFIC FIRST AID MEASURES ARE REQUIRED BECAUSE THIS MATERIAL IS NOT EXPECTED TO CAUSE EYE IRRITATION. AS A PRECAUTION REMOVE CONTACT LENSES, IF WORN, AND FLUSH EYES WITH WATER.
SKIN:
REMOVE CONTAMINATED CLOTHING AND SHOES. USE A WATERLESS HAND CLEANER, MINERAL OIL, OR PETROLEUM JELLY TO REMOVE THE MATERIAL THEN WASH SKIN WITH SOAP AND WATER. WASH OR CLEAN CONTAMINATED CLOTHING AND SHOES BEFORE REUSE.
INGESTION:
NO SPECIFIC FIRST AID MEASURES ARE REQUIRED BECAUSE THIS MATERIAL IS NOT EXPECTED TO BE HARMFUL IF SWALLOWED. DO NOT INDUCE VOMITING. AS A PRECAUTION, GIVE THE PERSON A GLASS OF WATER OR MILK TO DRINK AND GET MEDICAL ADVICE. NEVER GIVE ANYTHING BY MOUTH TO AN UNCONSCIOUS PERSON.
INHALATION:
IF EXPOSED TO EXCESSIVE LEVELS OF MATERIAL IN THE AIR, MOVE THE EXPOSED PERSON TO FRESH AIR. GET MEDICAL ATTENTION IF COUGHING OR RESPIRATORY DISCOMFORT OCCURS.
NOTE TO PHYSICIANS:
IN AN ACCIDENT INVOLVING HIGH-PRESSURE EQUIPMENT, THIS PRODUCT MAY BE INJECTED UNDER THE SKIN. SUCH AN ACCIDENT MAY RESULT IN A SMALL SOMETIMES BLOODLESS, PUNCTURE WOUND. HOWEVER, BECAUSE OF ITS DRIVING FORCE, MATERIAL INJECTED INTO A FI NGERTIP CAN BE DEPOSITED INTO THE PALM OF THE HAND. WITHIN 24 HOURS, THERE IS USUALLY A GREAT DEAL OF SWELLING, DISCOLORATION AND INTENSE THROBBING PAIN. IMMEDIATE TREATMENT AT A SURGICAL EMERGENCY CENTER IS RECOMMENDED.

FIRE FIGHTING MEASURES

FIRE CLASSIFICATION:
CLASSIFICATION (29 CFR 1910.1200): NOT CLASSIFIED BY OSHA AS FLAMMABLE OR COMBUSTIBLE.
FLAMMABLE PROPERTIES:
FLASH POINT: (COC) >525F (>273C)
AUTOIGNITION: NDA
FLAMMABILITY LIMITS (% BY VOLUME IN AIR): LOWER: NA UPPER: NA
EXTINGUISHING MEDIA: C02, DRY CHEMICAL, FOAM AND WATER FOG.
NFPA RATINGS: HEALTH 1, FLAMMABILITY 1, REACTIVITY 0.
FIRE FIGHTING INSTRUCTIONS:
THIS MATERIAL WILL BURN ALTHOUGH IT IS NOT EASILY IGNITED.
COMBUSTION PRODUCTS:
NORMAL COMBUSTION FORMS CARBON DIOXIDE, WATER VAPOR AND MAY PRODUCE OXIDES OF SULFUR, NITROGEN AND PHOSPHORUS. COMBUSTION MAY FORM OXIDES OF CALCIUM AND H2S. INCOMPLETE COMBUSTION CAN PRODUCE CARBON MONOXIDE.

ACCIDENTAL RELEASE MEASURES

CLEAN UP SPILLS IMMEDIATELY, OBSERVING PRECAUTIONS IN EXPOSURE CONTROLS/ PERSONAL PROTECTION SECTION.

HANDLING AND STORAGE

HANDLING & STORAGE: NO SPECIAL REQUIREMENTS.

EXPOSURE CONTROLS/PERSONAL PROTECTION

GENERAL CONSIDERATIONS:
CONSIDER THE POTENTIAL HAZARDS OF THIS MATERIAL (SEE HAZARDS IDENTIFICATION) APPLICABLE EXPOSURE LIMITS, JOB ACTIVITIES, AND OTHER SUBSTANCES IN THE WORK PLACE WHEN DESIGNING ENGINEERING CONTROLS AND SELECTING PERSONAL PROTECTIVE EQUIPMENT. IF ENGINEERING CONTROLS OR WORK PRACTICES ARE NOT ADEQUATE TO PREVENT EXPOSURE TO HARMFUL LEVELS OF THIS MATERIAL, THE PERSONAL PROTECTIVE EQUIPMENT LISTED BELOW IS RECOMMENDED. THE USER SHOULD READ AND UNDERSTAND ALL INSTRUCTIONS AND LIMITATIONS SUPPLIED WITH THE EQUIPMENT SINCE PROTECTION IS USUALLY PROVIDED FOR A LIMITED TIME OR UNDER CERTAIN CIRCUMSTANCES.

ENGINEERING CONTROLS:
USE IN A WELL-VENTILATED AREA. IF USER OPERATIONS GENERATE AN OIL MIST, USE PROCESS ENCLOSURES, LOCAL EXHAUST VENTIIATION, OR OTHER ENGINEERING CONTROLS TO CONTROL AIRBORNE LEVELS BELOW THE RECOMMENDED MINERAL OIL MIST EXPOSURE LIMITS.

PERSONAL PROTECTIVE EQUIPMENT:
EYE/FACE PROTECTION:
NO SPECIAL EYE PROTECTION IS NORMALLY REQUIRED.
SKIN PROTECTION:
WEAR PROTECTIVE CLOTHING IF ENGINEERING CONTROLS OR WORK PRACTICES ARE NOT

ADEQUATE TO PREVENT SKIN CONTACT. SELECTION OF PROTECTIVE CLOTHING MAY INCLUDE GLOVES, APRON, BOOTS, AND COMPLETE FACIAL PROTECTION DEPENDING ON OPERATIONS CONDUCTED. SUGGESTED MATERIALS FOR PROTECTIVE GLOVES INCLUDE: (NITRILE) (VITON) (SILVER SHIELD).
RESPIRATORY PROTECTION:
NO RESPIRATORY PROTECTION IS NORMALLY REQUIRED. IF USER OPERATIONS GENERATE AN OIL MIST, DETERMINE IF AIRBORNE CONCENTRATIONS ARE BELOW THE RECOMMENDED MINERAL OIL MIST EXPOSURE LIMITS. IF NOT WEAR A NIOSH APPROVED RESPIRATOR THAT PROVIDES ADEQUATE PROTECTION FROM MEASURED CONCENTRATIONS OF THIS MATERIAL. USE THE FOLLOWING ELEMENTS FOR AIR-PURIFYING RESPIRATORS: PARTICULATE

PHYSICAL AND CHEMICAL PROPERTIES

PHYSICAL DESCRIPTION:	GREEN GREASE
p/H:	NDA
VAPOR PRESSORE.	NDA
VAPOR DENSITY:	(AIR=1)
BOILING POINT:	NDA
FREEZING POINT:	NDA
MELTING POINT	NDA
SOLUBILITY:	SOLUBLE IN HYDROCARBON SOLVENTS; INSOLUBLE IN WATER.
SPECIFIC GRAVITY:	1.02 @ 15.6C/15.5
EVAPORATION RATE	NA
VISCOSITY:	>100 SUS @ 100F
PRECENT VOLATILE (VOL):	NA

STABILITY AND REACTIVITY

HAZARDOUS DECOMPOSITION PRODUCTS:
NO DATA AVAILABLE.
CHEMICAL STABILITY:
STABLE.
CONDITIONS TO AVOID:
NO DATA AVAILABLE.
INCOMPATIBILITY WITH OTHER MATERIALS:
MAY REACT WITH STRONG OXIDIZING AGENTS, SUCH AS CHLORATES, PEROXIDES, ETC.
HAZARDOUS POLYMERIZATION:
POLYMERIZATION WILL NOT OCCUR.

TOXICOLOGICAL INFORMATION

EYE EFFECTS:
THE EYE IRRITATION HAZARD IS BASED ON DATA FOR A SIMILAR MATERIAL.
SKIN EFFECTS.
THE SKIN IRRITATION HAZARD IS BASED ON DATA FOR A SIMILAR MATERIAL.
ACUTE INHALATION EFFECTS:
THE ACUTE RESPIRATORY TOXICITY IS BASED ON DATA FOR A SIMILAR MATERIAL.
ADDITIONAL TOXICOLOGY INORMATION:
THIS PRODUCT CONTAINS PETROLEUM BASE OILS WHICH MAY BE REFINED BY VARIOUS PROCESSES INCLUDING SEVERE SOLVENT EXTRACTION, SEVERE HYDROCRACKING, OR SEVERE HYDROTREATING. NONE OF THE OILS REQUIRES A CANCER WARNING UNDER THE OSHA HAZARD COMMUNICATION STANDARD (29 CFR 1910.1200). THESE OILS HAVE NOT BEEN LISTED IN THE NATIONAL TOXICOLOGY PROGRAM (NTP) ANNUAL REPORT NOR HAVE THEY BEEN CLASSIFIED BY THE INTERNATIONAL AGENCY FOR RESEARCH ON CANCER (IARC) AS; CARCINOGNIC TO HUMANS (GROUP 1), PROBABLY CARCINOGENIC TO HUMANS (GROUP 2A), OR POSSIBLY CARCINOGENIC TO HUMANS (GROUP 2B).

ECOLOGICAL INFORMATION

ECOTOXICITY:
NO DATA AVAILABLE.
ENVIRONMENTAL FATE:
THIS MATERIAL IS NOT EXPECTED TO BE READILY BIODEGRADABLE.

DISPOSAL CONSIDERATIONS

OIL COLLECTION SERVICES ARE AVAILABLE FOR USED OIL RECYCLING OR DISPOSAL. PLACE CONTAMINATED MATERIALS IN CONTAINERS AND DISPOSE OF IN A MANNER CONSISTENT WITH APPLICABLE REGULATIONS. CONTACT YOUR LOCAL ENVIRONMENTAL OR HEALTH AUTHORITIES FOR APPROVED DISPOSAL OR RECYCLING METHODS.

TRANSPORT INFORMATION

TRANSPORTATION INFORMATION:
THE DESCRIPTION SHOWN MAY NOT APPLY TO ALL SHIPPING SITUATIONS. CONSULT 49CFR, OR APPROPRIATE DANGEROUS GOODS REGULATIONS, FOR ADDITIONAL DESCRIPTION REQUIREMENTS (E.G. TECHNICAL NAME AND MODE-SPECIFIC OR QUANTITY-SPECIFIC SHIPPING REQUIREMENTS.

DOT SHIPPING NAME:	NONE	DOT HAZARD CLASS:	NONE
DOT IDENTIFICATION #:	NONE	DOT PACKING GROUP:	N/A
ADDITIONAL INFO:	PETROLEUM LUBRICATING GREASE - NOT HAZARDOUS BY US DOT, ADR/RID HAZARD CLASS - NOT APPLICABLE.		

REGULATORY INFORMATION

SARA 311 CATEGORIES:	1. IMMEDIATE (ACUTE) HEALTH EFFECTS:	NO
	2. DELAYED (CHRONIC) HEALTH EFFECTS:	NO
	3. FIRE HAZARDS:	NO
	4. SUDDEN RELEASE OF PRESSURE HAZARD:	NO
	5. REACTIVITY HAZARDS:	NO

FOOD CONTACT STATUS

USDA: H-2 STATUS: THIS PRODUCT IS ACCEPTABLE TO THE USDA FOR USE AS A LUBRICATE IN OFFICIAL MEAT AND POULTRY ESTABLISHMENTS PROVIDED THERE IS NO POSSIBILITY OF THE LUBRICANT OR LUBICATED PART CONTACTING EDIBLE PRODUCTS.

OTHER INFORMATION

NFPA RATINGS: HEALTH 1, FLAMMABILITY 1, REACTIVITY 0.
HMIS RATINGS: HEALTH 1, FLAMMABILITY 1, REACTIVITY 0.
(0-LEAST, 1-SLIGHT, 2-MODERATE, 3-HIGH, 4-EXTREME, PPE: - PERSONAL PROTECTION EQUIPMENT INDEX RECOMMENDATION, CHRONIC EFFECT INDICATOR). THESE VALUES ARE OBTAINED USING THE GUIDELINES OR PUBLISHED EVALUATIONS PREPARED BY THE NATIONAL FIRE PROTECTION ASSOCIATION (NFPA) OR THE NATIONAL PAINT AND COATING ASSOCIATION (FOR HMIS RATINGS).

ABBREVIATIONS THAT MAY HAVE BEEN USED IN THIS DOCUMENT.

TLV	- THRESHOLD LIMIT VALUE	TWA	- TIME WEIGHTED AVERAGE
STEL	- SHORT-TERM EXPOSURE LIMIT	TPQ	- THRESHOLD PLANNING QUANTITY
RQ	- REPORTABLE QUANTITY	PEL	- PERMISSIBLE EXPOSURE LIMIT
C	- CEILING LIMIT	CAS	- CHEMICAL ABSTRACT SERVICE NUMBER
A1-5	- APPENDIX A CATEGORIES	Δ	- CHANGE HAS BEEN PROPOSED
NDA	- NO DATA AVAILABLE	NA	- NOT APPLICABLE

ISSUED: JULY 15, 2008
SUPERSEDES: SEPTEMBER 01, 2005

THE ABOVE INFORMATION IS BASED ON THE DATA OF WHICH WE ARE AWARE AND IS BELIEVED TO BE CORRECT AS OF THE DATE HEREOF. SINCE THIS INFORMATION MAY BE APPLIED UNDER CONDITIONS BEYOND OUR CONTROL AND WITH WHICH WE MAY BE UNFAMILIAR AND SINCE DATA MADE AVAILABLE SUBSEQUENT TO THE DATE HEREOF MAY SUGGEST MODIFICATION OF THE

E Appendix

Oxygen Generator Decommissioning and Disposal Guideline

Introduction:
Oxygen generator must be assessed for its redundancy and thereby managed according to the owner's existing policies for proper decommissioning and disposal. In situations where policies are not well defined, this guideline may be used to decommission and dispose the oxygen generator.

This guideline describes typical process to ensure effective decommissioning and disposal of the oxygen generator.

Definitions:
Decommission - Process of removing oxygen generator from service.

Reuse – Using the oxygen generator at a different location after decommissioning it from its current location.

Scrapping – Disposing the oxygen generator following all local governing ordinances and recycling plans.

Procedure:
1. Identify the status of the redundant oxygen generator, i.e.

   - Fully Functional
   - Partially Functional/Repairable
   - Damaged/Non-repairable

2. Decommission
   Decommissioning of the oxygen generator shall be performed in accordance to the owner's quality assurance procedures. A typical decommissioning includes the following:

   - Updating the equipment database
   - Removal of maintenance contracts and/or service schedules
   - If the oxygen generator is fully functional or can be repaired for reuse, an assessment should be done for the current value. An assessment report on type and cost of repairs (if required) should also be prepared. Also, probable future owners should be identified and advised of the availability of the device.
   - Redundant oxygen generator should be assessed for contamination with chemical, biological or radiological substances. Contaminated device or its components must be accompanied by a signed risk assessment and may only be disposed following the local governing ordinances to an authorized recipient.

3. Reuse
   If the oxygen generator can be reused (For example: by a different department, by selling it to a new owner), all the necessary instructions for safe and efficient operation shall be transferred to the new user.

4. Scrapping
   Oxygen generator that cannot be reused shall be scrapped to a scrap metal recycling centre following all the governing ordinances and recycling plans.

Manufactured by:
AirSep Corporation

MN150-1 Rev B