TRIFECTA® X-SERIES

LASER ASSIST GAS SUPPLY SYSTEM FOR INERT SERVICE (600 MAWP)

The Trifecta® X-Series is the preferred solution for reliable and continuous laser assist gases for delivery pressures up to 550 psig and flow rates up to 15,000 scfh. Drawing liquid from a standard bulk tank, the Trifecta system boosts the liquid pressure by alternately feeding two liquid cylinders equipped with innovative multi-function pressure building vaporizers. The Trifecta solution has no down-time and minimal losses when compared with other laser assist gas solutions. This convenient solution eliminates high-pressure pumps, compressors, cylinder cradles and surge tanks.

Models X10 or X15

Visual Indication for Operation Modes

Integrated Bulk Tank Pressure Sensor

Dual Relief Valve Assembly

Two Main Connections Simplify Installation

PRODUCT HIGHLIGHTS

- System utilizes standard low-pressure bulk tank to lower investment and use existing assets
- No downtime – system maintains pressure and flow when bulk tank is filled and eliminates excessive product losses associated with high-pressure bulk tanks
- Cylinders switch by pressure instead of level to further reduce product loss and protect against pressure decay
- Robust design features streamlined all stainless steel piping with only five control valves and one integrated electronic control system (PLC) for increased durability and reliability
- Computer-controlled design simplifies installation, start-up and continuous operation
- Frame assembly features a protective top cover in a compact footprint with an elevated base for improved ventilation
- Available for Nitrogen and Argon service

CHART®

Innovation. Experience. Performance.

TRIFECTA® X-SERIES

LASER ASSIST GAS SUPPLY SYSTEM FOR INERT SERVICE (600 MAWP)

SIMPLIFIED STAINLESS STEEL PLUMBING WITH PROTECTIVE TOP COVER

System Requirements

- 15 amp, 110 VAC power, dedicated circuit (230 VAC panel also available)
- Bulk storage tank with 100 psig minimum pressure
- External vaporizer, minimum 700 psig working pressure, sized for maximum flow rate
- Two piping connections to bulk storage tank (liquid withdrawal & low phase instrument line)
- High-flow pressure regulation

Dimensions

Length	53"	1347 mm
Width	55"	1400 mm
Height	96"	2440 mm
Weight X10	1750 lbs	795 kg
Weight X15	1800 lbs	815 kg

Service	MAWP (psig)	MAOP (psig)*	Model	
			X10	X15
LIN	600	550	x	x
LAR	600	550	x	x

Maximum Allowable Operating Pressure

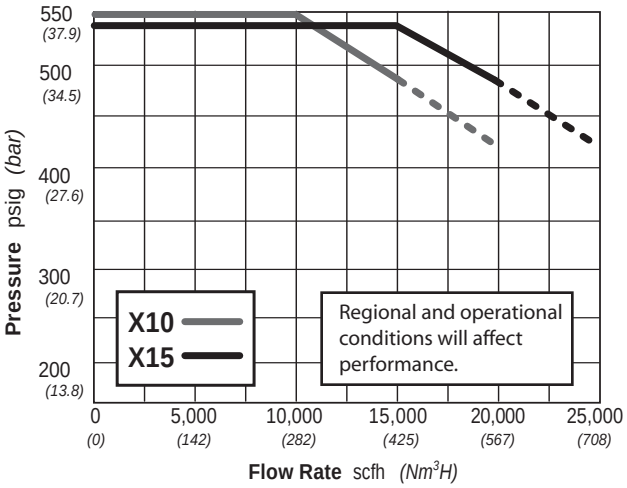

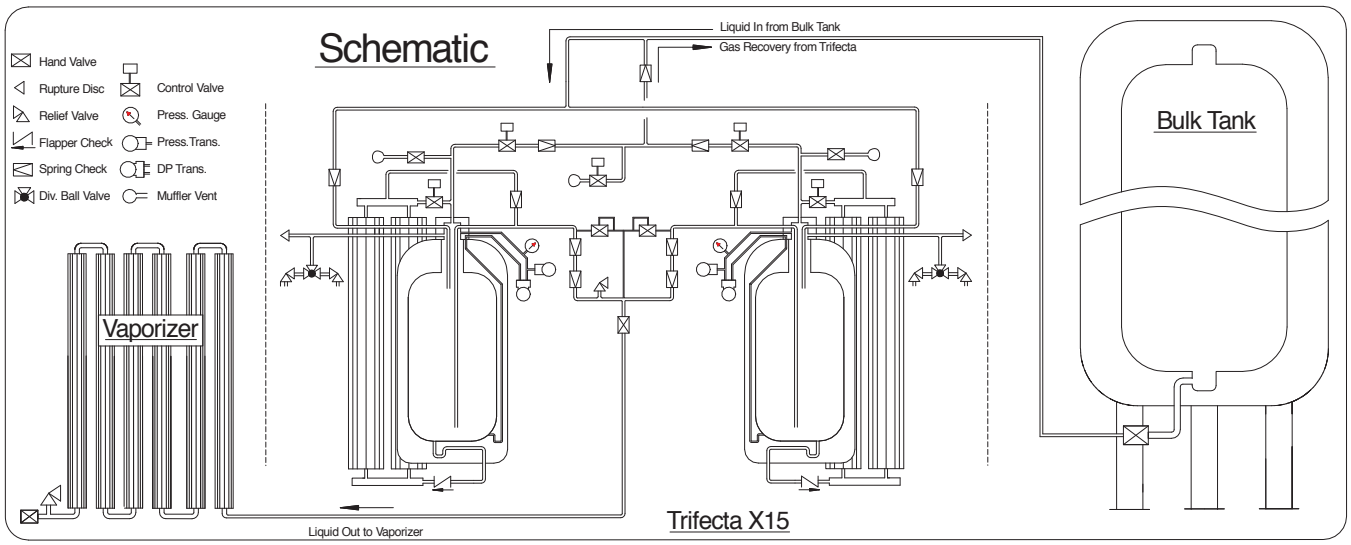

Chart Inc.
U.S.: 1-800-400-4683
Worldwide: 1-952-758-4484

CHART®
Innovation. Experience. Performance.

© 2013 Chart Inc.
P/N 20724047
www.chartindustries.com